JOCMC35C-D4P/S Series

Rev.A.1.0

DESCRIPTION:

The products are 4-pin optical relays. The device consists of an AlGaAs infrared emitting diode input stage optically coupled to a high-voltage output detector circuit. The detector consists of a high-speed photovoltaic diode array and driver circuitry. The products are widely used in measuring and testing equipment, security and disaster prevention market, industrial machinery and equipment.

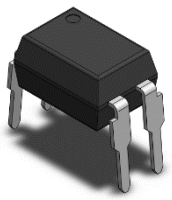

JOCMC35C-D4P

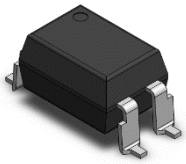

JOCMC35C-D4S

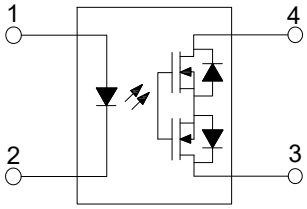

MAIN FEATURES

High isolation 5000 Vrms
Operating temperature range -40°C to 110°C
REACH & RoHS compliance
HBM: H3A; MM: M4; CDM: C3
CQC approved
VDE approved
UL approved

ABSOLUTE MAXIMUM RATINGS (Temperature=25°C)

Parameter		Symbol	Value	Unit
Input	Forward Current	I_F	50	mA
	Peak Forward Current	I_{FP}	1①	A
	Reverse Voltage	V_R	6	V
	Input Power Dissipation	P_D	75	mW
Output	Load Voltage	V_O	60	V
	Continuous load current	I_O	0.18	A
	Output Power Dissipation	P_O	300	mW
Total Power Dissipation		P_{tot}	375	mW
Isolation Voltage		V_{iso}	3750②	Vrms
Operating Temperature		T_{opr}	-40~110	℃
Junction Temperature		T_j	125	℃
Storage Temperature		T_{stg}	-40~125	℃
Soldering Temperature		T_{sol}	260	℃

NOTE1: 100μs pulse, 100Hz frequency
NOTE2: AC for 1minute, R.H.=40~60%

ELECTRICAL CHARACTERISTICS (Temperature=25°C)

Parameter		Symbol	Condition	Min.	Typ.	Max.	Unit
Input	Forward Voltage	V_F	I_F=10mA	-	1.2	1.5	V
	Reverse Current	I_R	V_R=6V	-	-	1	μA
	Action Current	$I_{F(OFF)}$	I_O=$I_{O(MAX)}$	-	1.5	3	mA
	Reset Current	$I_{F(ON)}$	I_O=$I_{O(MAX)}$	0.4	0.8	-	mA
Output	On Resistance	R_{on}	I_F=5mA I_O=Max. Within 1s on time	-	10	15	Ω
	Off State Leakage Current	I_{Leak}	I_F=3mA, V_O=Max.	-	-	10	μA
Switching Characteristics	Isolation Resistance	R_{ISO}	DC500V 40~60%R.H.	10^{12}	-	-	Ω
	Floating Capacitance	C_{IO}	V=0, f=1MHz	-	0.8	-	pF
	Turn On Time	t_{on}	I_F=5mA, I_O=Max.	-	0.2	1	ms
	Turn Off Time	t_{off}	I_F=5mA, I_O=Max.	-	0.2	1	ms

ORDERING INFORMATION

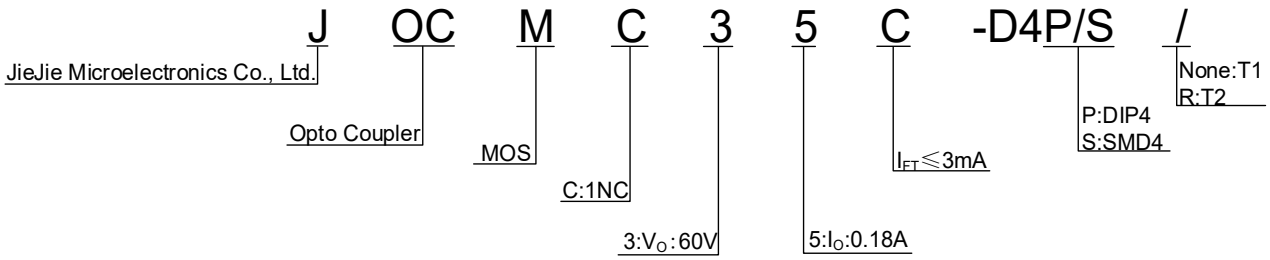

Packing Quantity			
Option	**Quantity**	**Quantity – Inner box**	**Quantity –Outer box**
DIP	100 Units/Tube	32 Tubes/Inner box	10 Inner box/Outer box =32k Units
SMD(T1/T2)	1500 Units/Reel	3 Reels/Inner box	5 Inner box/Outer box =22.5k Units

MARKING

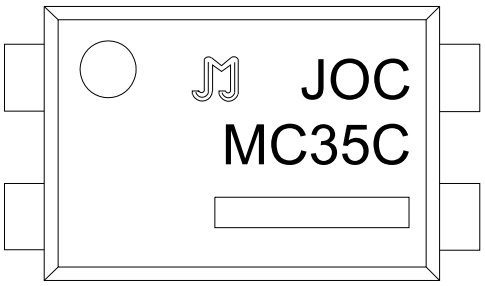

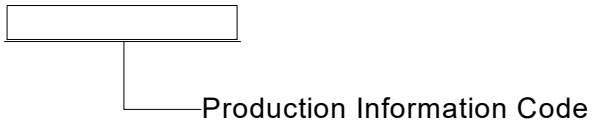

Characteristics Curves

FIG.1: LED Dropout Voltage vs. Ambient Temperature

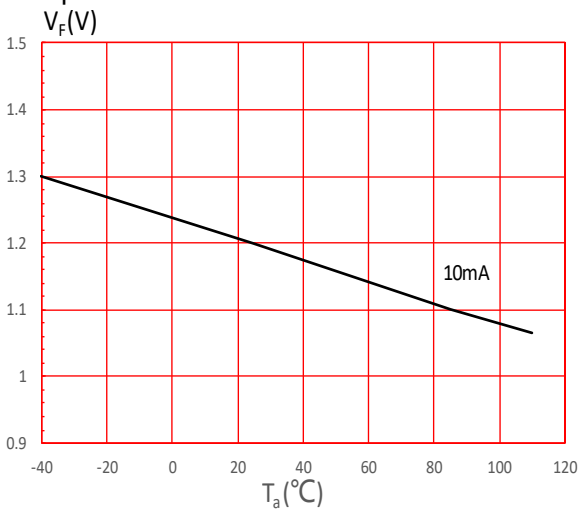

FIG.2: Output Current vs. Output Voltage

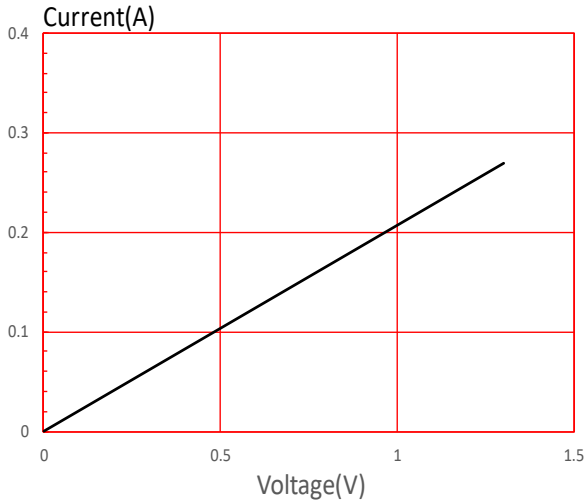

FIG.3: On Resistance vs. Ambient Temperature

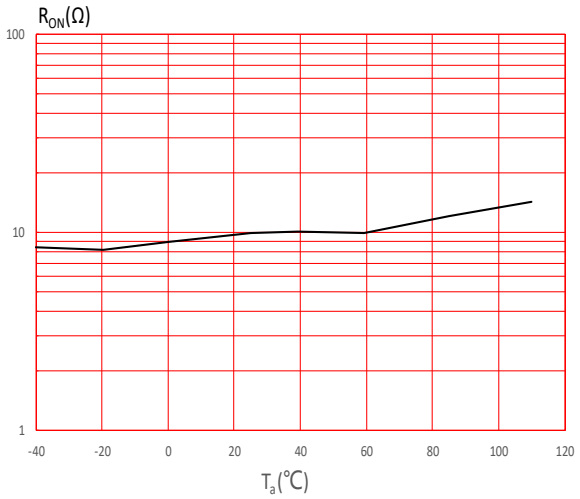

FIG.4: Load Current vs. Ambient Temperature

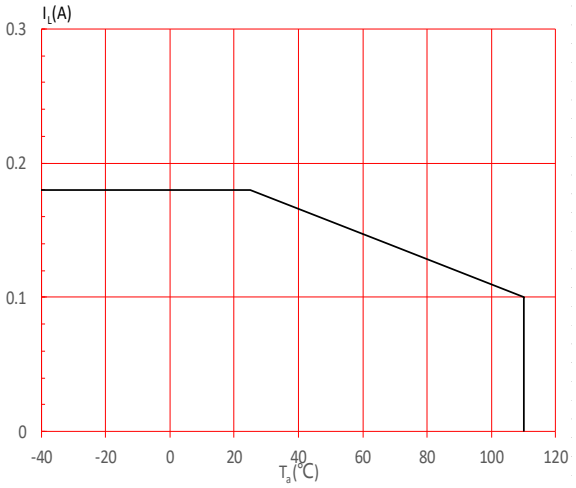

FIG.5: LED Operate Current vs. Ambient Temperature

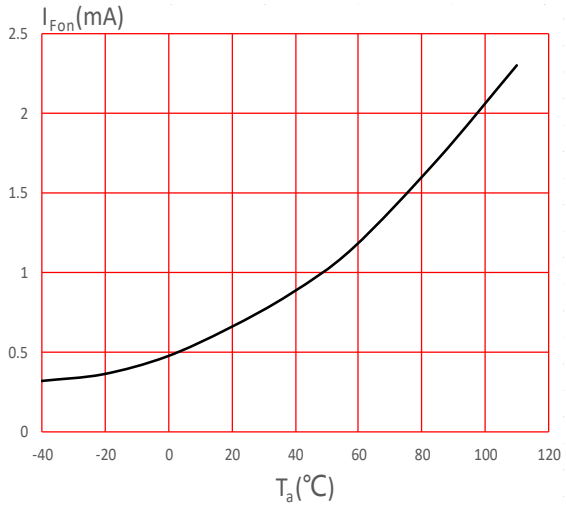

FIG.6: LED Turn Off Current vs. Ambient Temperature

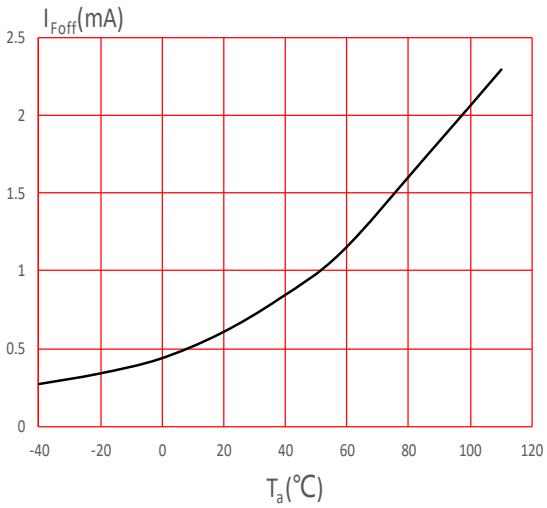

FIG.7: Turn On Time vs. Ambient Temperature

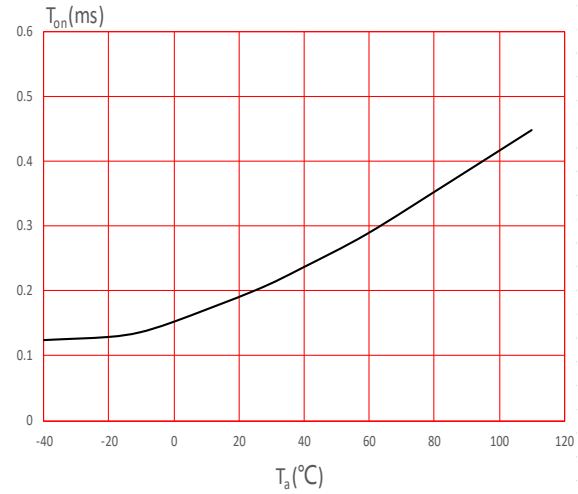

FIG.8: Turn Off Time vs. Ambient Temperature

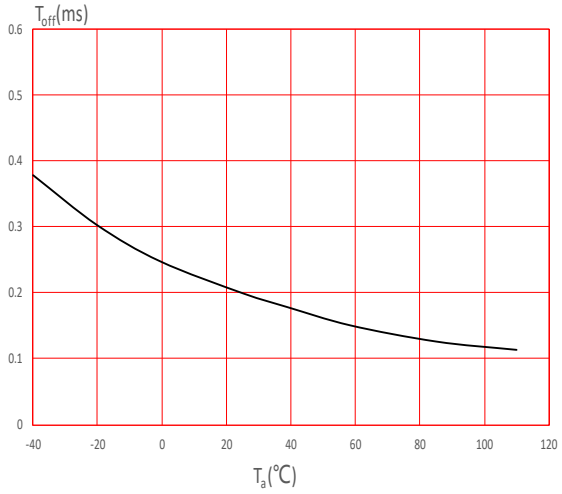

FIG.9: Turn On Time vs. LED Forward Current

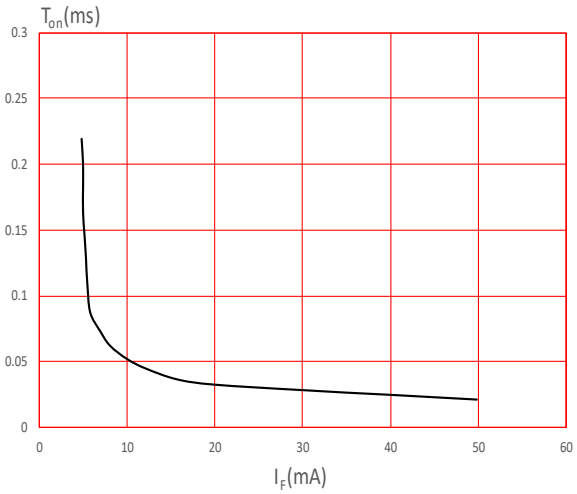

FIG.10: Turn Off Time vs. LED Forward Current

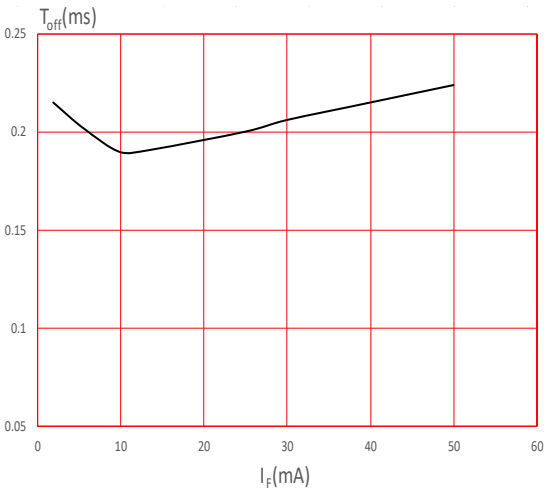

FIG.11: Off State Leakage Current vs. Load Voltage

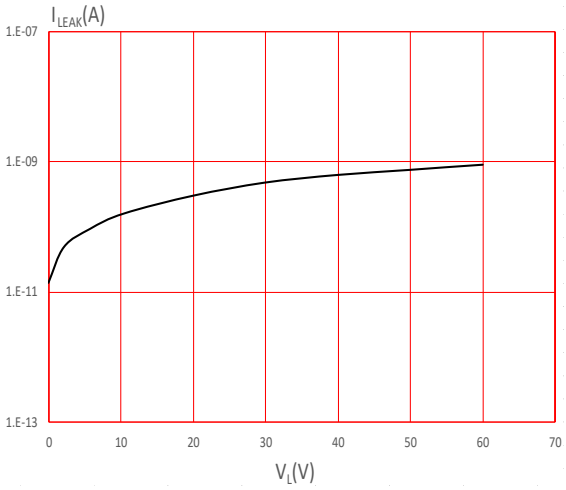

Fig.12: Turn on/Turn off time

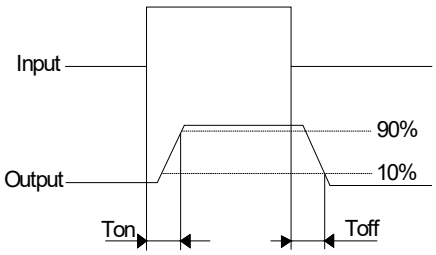

Package Dimension (Unit: mm)

Standard DIP Type:

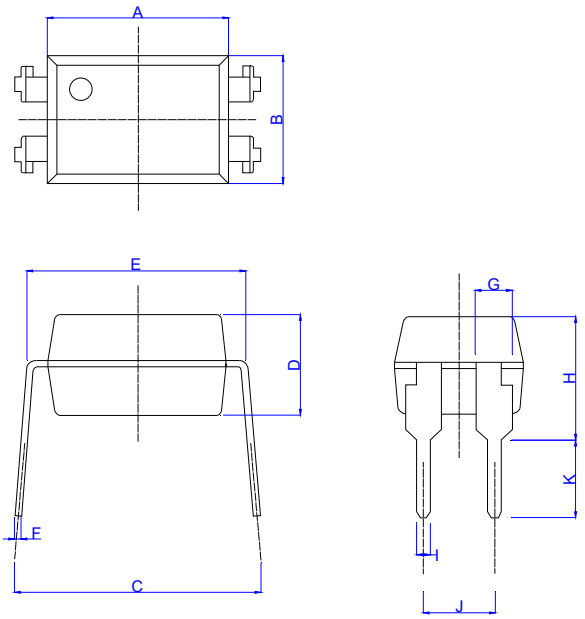

Ref.	Dimensions					
	Millimeters			Inches		
	Min.	Typ.	Max.	Min.	Typ.	Max.
A	6.30	6.50	6.70	0.248	0.256	0.264
B	4.30	4.50	4.70	0.169	0.177	0.185
C	7.62	8.56	9.50	0.300	0.337	0.374
D	3.20	3.40	3.60	0.126	0.134	0.142
E	7.32	7.62	7.92	0.288	0.300	0.312
F	0.15	0.25	0.35	0.006	0.100	0.014
G	0.95	1.15	1.35	0.037	0.045	0.053
H	4.20	4.50	4.80	0.165	0.177	0.189
I	0.40	0.50	0.60	0.016	0.020	0.024
J	2.29	2.54	2.79	0.090	0.100	0.110
K	2.50	2.80	3.10	0.098	0.110	0.122

Option SMD Type:

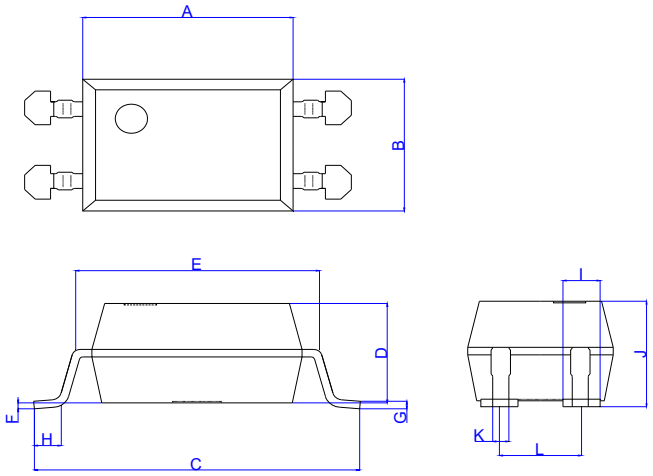

Ref.	Dimensions					
	Millimeters			Inches		
	Min.	Typ.	Max.	Min.	Typ.	Max.
A	6.30	6.50	6.70	0.248	0.256	0.264
B	4.30	4.50	4.70	0.169	0.177	0.185
C	9.80	10.10	10.40	0.386	0.398	0.409
D	3.20	3.40	3.60	0.126	0.134	0.142
E	7.32	7.62	7.92	0.288	0.300	0.312
F	0.00	0.20	0.40	0.000	0.008	0.016
G	0.06	0.26	0.46	0.002	0.010	0.018
H	0.70	1.00	1.30	0.028	0.039	0.051
I	0.95	1.15	1.35	0.037	0.045	0.053
J	3.40	3.60	3.80	0.134	0.142	0.150
K	0.30	0.50	0.70	0.012	0.020	0.028
L	2.29	2.54	2.79	0.090	0.100	0.110

RECOMMENDED SOLDER MASK (Dimensions in mm unless otherwise stated)

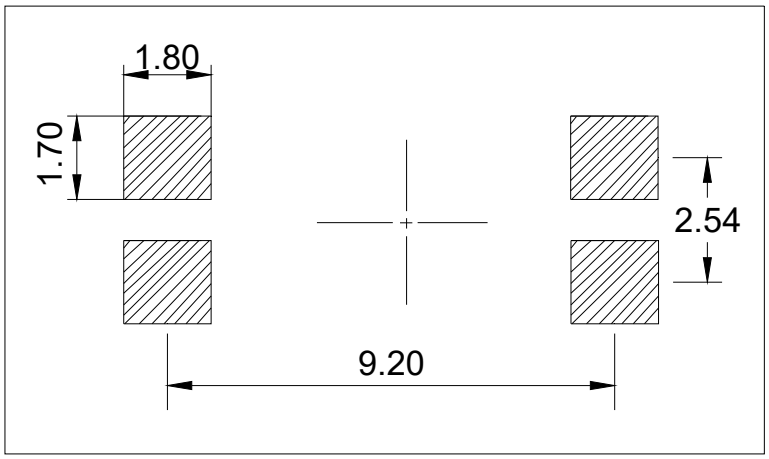

TUBE SPECIFICATIONS (Dimensions in mm unless otherwise stated)

Standard DIP

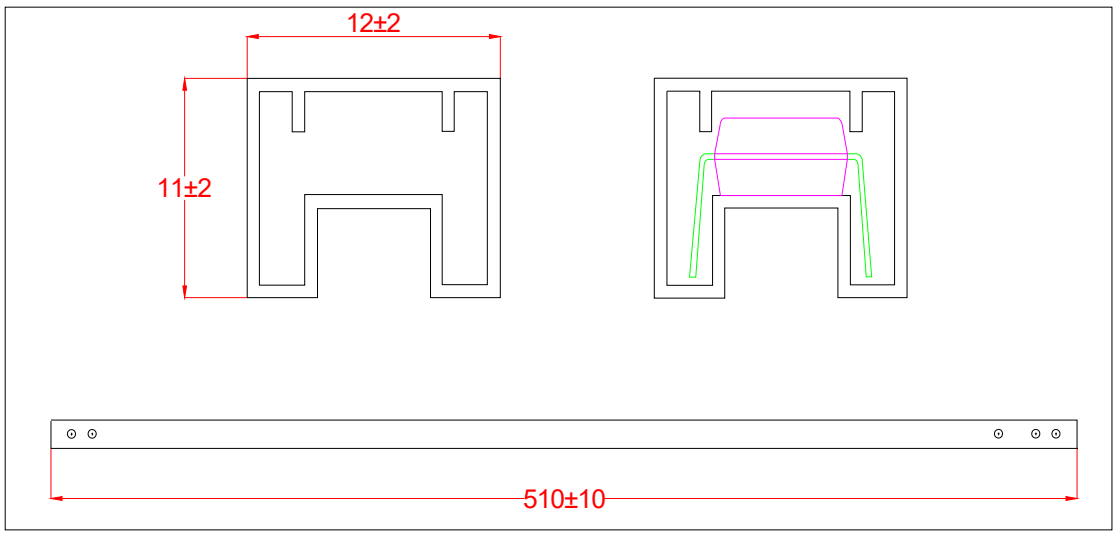

CARRIER TAPE SPECIFICATIONS (Dimensions in mm unless otherwise stated)

T1

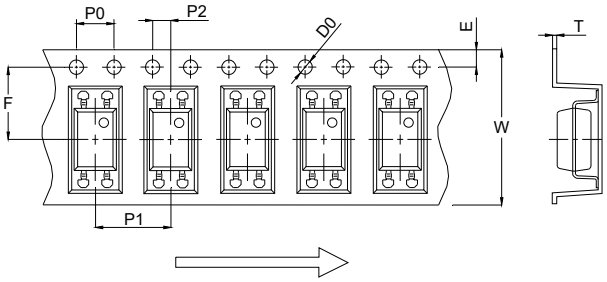

T2

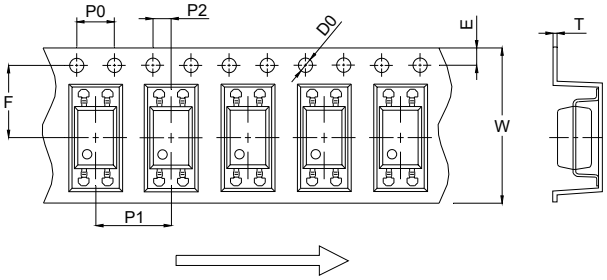

Ref.	Dimensions					
	Millimeters			Inches		
	Min.	Typ.	Max.	Min.	Typ.	Max.
D0		1.50	1.65		0.059	0.065
P0	3.90	4.00	4.10	0.154	0.157	0.161
P1	7.90	8.00	8.10	0.311	0.315	0.319
P2	1.90	2.00	2.10	0.075	0.079	0.083
E	1.65	1.75	1.85	0.065	0.069	0.073
F	7.40	7.50	7.60	0.291	0.295	0.299
T	0.35	0.40	0.45	0.014	0.016	0.018
W	15.90	16.00	16.20	0.626	0.630	0.638

REFLOW INFORMATION

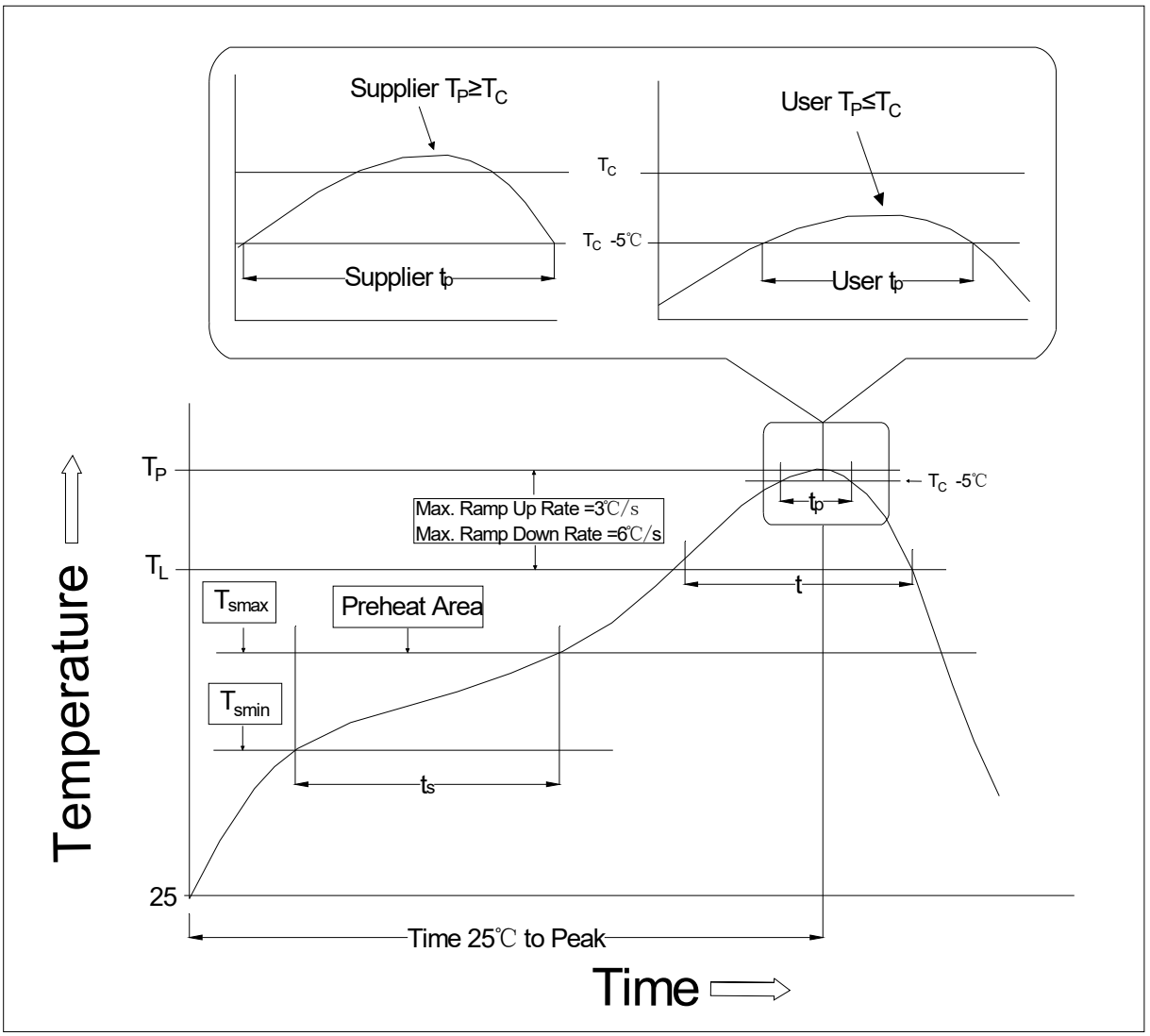

Profile Feature	Sn-Pb Assembly Profile	Pb-Free Assembly Profile
Temperature Min. (Tsmin)	100℃	150℃
Temperature Max. (Tsmax)	150℃	200℃
Time (ts) from (Tsmin to Tsmax)	60-120 seconds	60-120 seconds
Ramp-up Rate (tL to tP)	3℃/second max.	3℃/second max.
Liquidus Temperature (TL)	183℃	217℃
Time (tL) Maintained Above (TL)	60-150 seconds	60-150 seconds
Peak Body Package Temperature	235℃+0℃/-5℃	260℃+0℃/-5℃
Time (tP) within 5℃ of 260℃	10 seconds	10 seconds
Ramp-down Rate (TP to TL)	3-6℃/second	3-6℃/second
Time 25℃ to Peak Temperature	6 minutes max.	8 minutes max.

WAVE SOLDERING

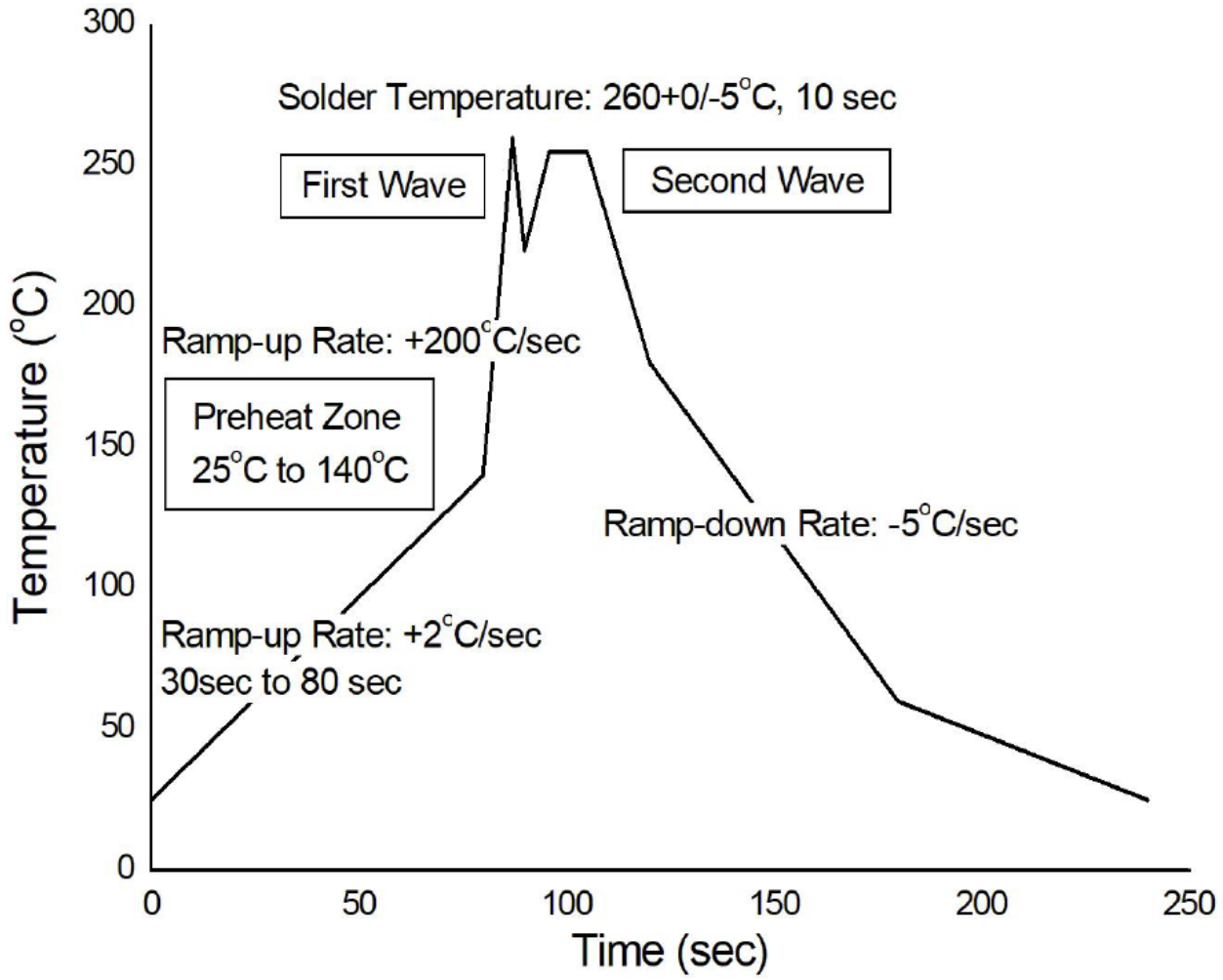

HAND SOLDERING BY SOLDERING IRON	
Soldering Temperature	360±5℃
Soldering Time	3s max.

Note:

1. Reflow soldering is recommended at the temperatures and times shown, no more than three times.

2. Avoid direct contact between the epoxy body and any tools or surfaces exceeding its maximum storage temperature.

3. Application of pressure on the epoxy body is prohibited at elevated temperatures. In specific scenarios, any applied force must not exceed 2.5N.

4. Ensure the component has cooled to ambient temperature before proceeding with any subsequent manufacturing steps.

5. The component has a shelf life of one year when stored under standard conditions.

6. Recommend storage Temp.: 0~40°C;

Recommend storage humidity: <60%;

MSL level: MSL 1

Information furnished in this document is believed to be accurate and reliable. However, Jiangsu JieJie Microelectronics Co., Ltd. assumes no responsibility for the consequences of use without consideration for such information nor use beyond it. Information mentioned in this document is subject to change without notice, apart from that when an agreement is signed, Jiangsu JieJie complies with the agreement.

Products and information provided in this document have no infringement of patents. Jiangsu JieJie assumes no responsibility for any infringement of other rights of third parties which may result from the use of such products and information. This document supersedes and replaces all information previously supplied.

is a registered trademark of Jiangsu JieJie Microelectronics Co., Ltd.

Copyright © 2026 Jiangsu JieJie Microelectronics Co., Ltd. All rights reserved.