ACJT625-10K 6A TRIAC

Rev.A.1.1

DESCRIPTION:

The ACJT625-10K triac is suitable for general purpose AC switching. It can be used as an ON/OFF function in applications such as heating regulation, induction motor starting circuits, for phase control operation in light dimmers, motor speed controllers. The ACJT625-10K embeds a TVS structure to absorb the inductive turn-off energy such as those described in the IEC 61000-4-5 standards. Package TO-252 is RoHS compliant.

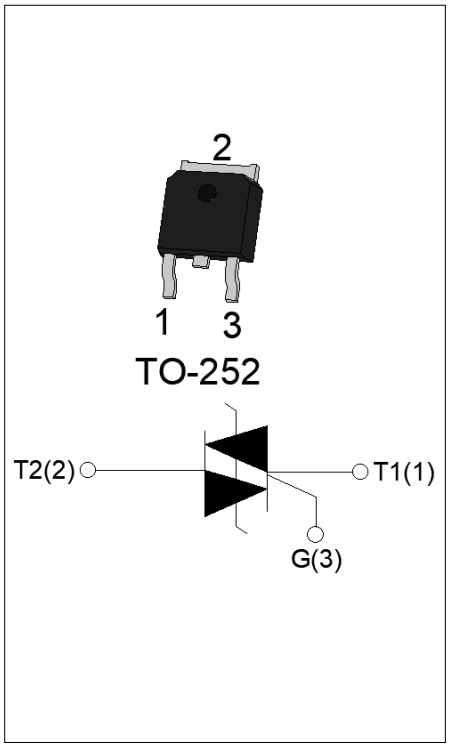

MAIN FEATURES

Symbol	Value	Unit
$I_{T(RMS)}$	6	A
V_{DRM} /V_{RRM}	1000	V
$I_{GT\ I/II/III}$	25/25/25	mA

ABSOLUTE MAXIMUM RATINGS

Parameter	Symbol	Value	Unit
Storage junction temperature range	T_{stg}	-40-150	℃
Operating junction temperature range	T_j	-40-125	℃
Repetitive peak off-state voltage (T_j=25℃)	V_{DRM}	1000	V
Repetitive peak reverse voltage (T_j=25℃)	V_{RRM}	1000	V
RMS on-state current (T_C≤91℃)	$I_{T(RMS)}$	6	A
Non repetitive surge peak on-state current (full cycle , t_p=20ms , T_j=25℃)	I_{TSM}	60	A
Non repetitive surge peak on-state current (full cycle , t_p=16.6ms , T_j=25℃)		66	
I^2t value for fusing (t_p=10ms , T_j=25℃)	I^2t	18	A^2s
Critical rate of rise of on-state current (I_G=2×I_{GT} , f=100Hz , T_j=125℃)	dI/dt	100	A/μs
Peak gate current (t_p=20μs , T_j=125℃)	I_{GM}	4	A
Average gate power dissipation (T_j=125℃)	$P_{G(AV)}$	0.5	W
Peak gate power	P_{GM}	10	W

Peak pulse voltage (T_j=25℃; non-repetitive,off-state;FIG.8)	V_{pp}	3.5	kV

ELECTRICAL CHARACTERISTICS (T_j=25℃ unless otherwise specified)

Symbol	Test Condition	Quadrant	Value		Unit
I_{GT}	V_D =12V R_L =33Ω	Ⅰ-Ⅱ-Ⅲ	MAX.	25	mA
V_{GT}		Ⅰ-Ⅱ-Ⅲ	MAX.	1	V
V_{GD}	V_D =V_{DRM} T_j =125℃ R_L =3.3kΩ	Ⅰ-Ⅱ-Ⅲ	MIN.	0.2	V
I_L	I_G =1.2I_{GT}	Ⅰ-Ⅲ	MAX.	40	mA
		Ⅱ		60	
I_H	I_T =100mA		MAX.	40	mA
dV/dt	V_D=670V Gate Open T_j =125℃		MIN.	1500	V/μs
(dI/dt)c	(dV/dt)c=20V/μs, T_j=125℃		MIN.	8	A/ms
t_{on}	I_G=40mA I_A=200mA I_R=20mA T_j=25℃		TYP.	5	μs
t_{off}				70	
V_{CL}	I_{CL}=0.1mA t_p=1ms		MIN.	1050	V

STATIC CHARACTERISTICS

Symbol	Parameter		Value(MAX.)	Unit
V_{TM}	I_{TM} =8.5A t_p=380μs	T_j=25℃	1.5	V
V_{TO}	Threshold voltage	T_j=125℃	0.82	V
R_D	Dynamic resistance	T_j=125℃	64	mΩ
I_{DRM}	V_D =V_{DRM} V_R =V_{RRM}	T_j=25℃	8	μA
I_{RRM}		T_j=125℃	0.5	mA

THERMAL RESISTANCES

Symbol	Parameter	Value	Unit
$R_{th(j-c)}$	junction to case (AC)	4	℃/W
$R_{th(j-a)}$	junction to ambient (AC)	120	℃/W

ORDERING INFORMATION

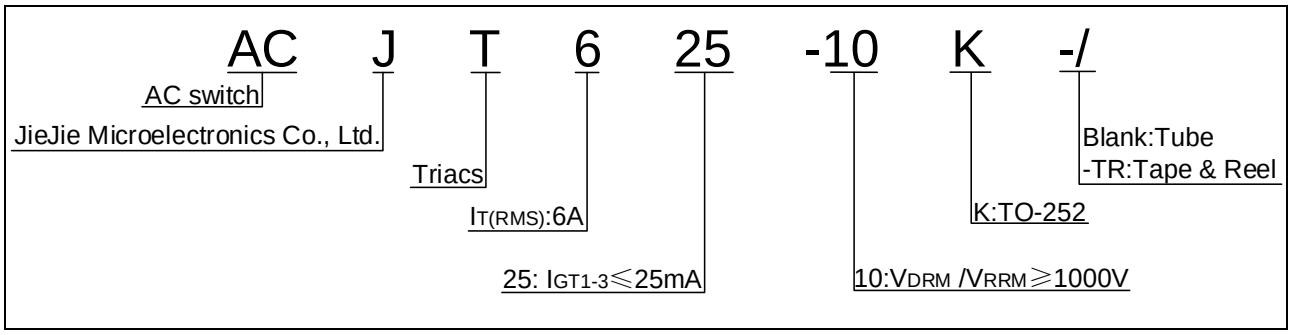

MARKING

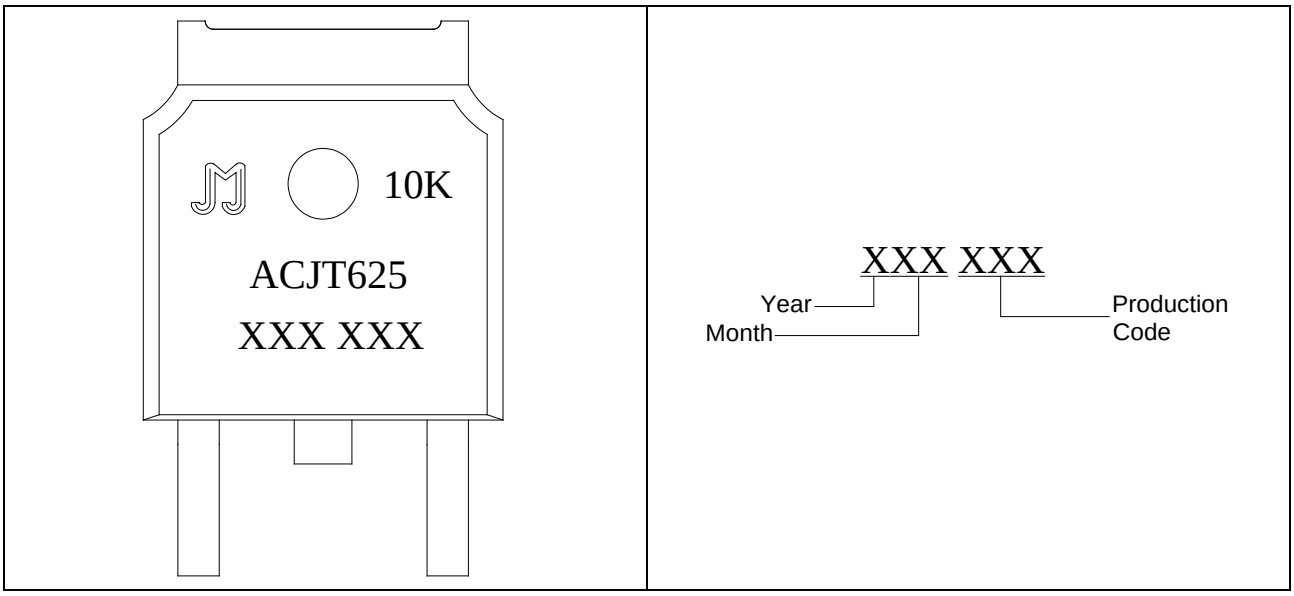

FIG.1: Maximum power dissipation versus RMS on-state current

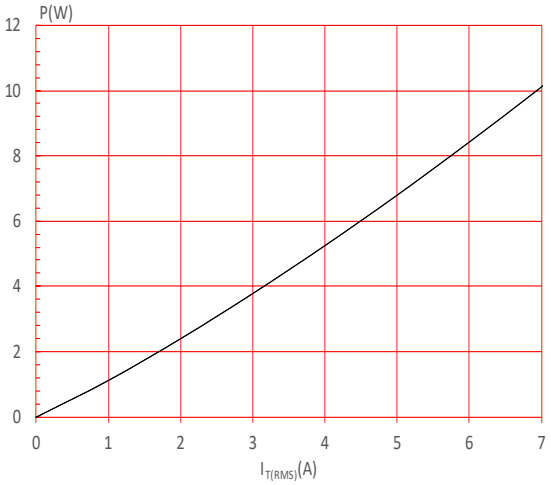

FIG.2: RMS on-state current versus case temperature

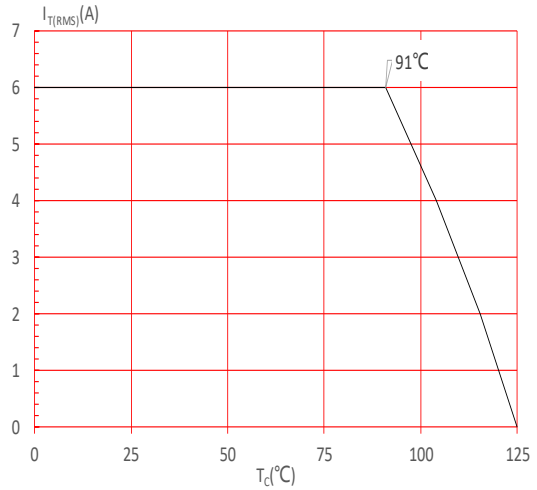

FIG.3: RMS on-state current versus ambient temperature (printed circuit board FR4,copper thickness:35μm)(full cycle)

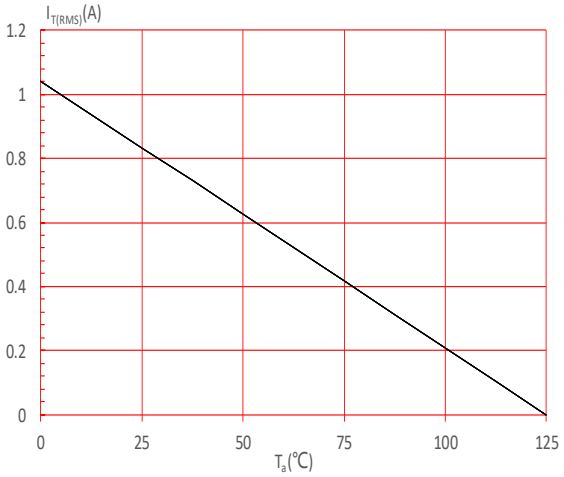

FIG.4: Surge peak on-state current versus number of cycles

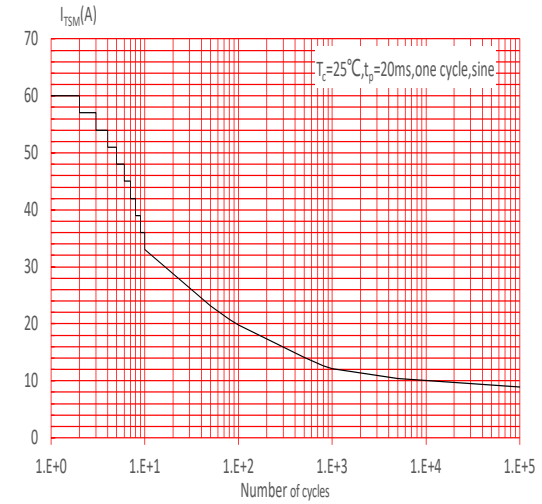

FIG.5: On-state characteristics

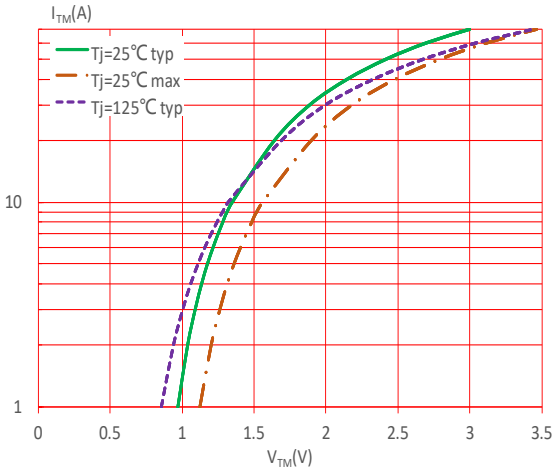

FIG.6: Non-repetitive surge peak on-state current for a sinusoidal pulse with width t_p<20ms, and corresponding value of I^2t (dI/dt<100A/μs)

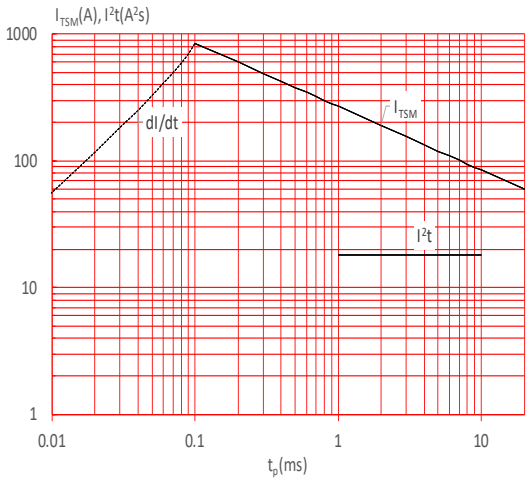

FIG.7: Relative variations of gate trigger current, holding current and latching current versus junction temperature

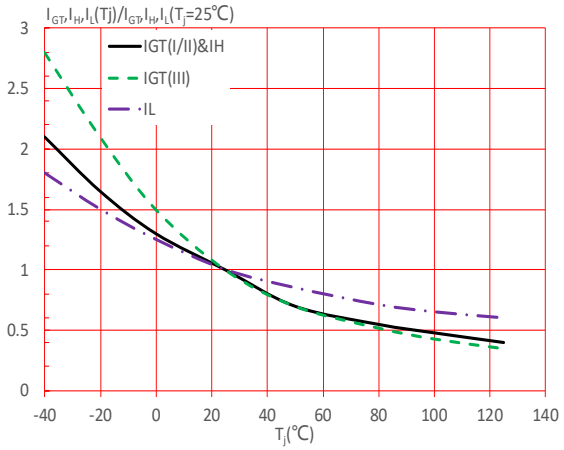

FIG.8：Test circuit for inductive and resistive loads to IEC-61000-4-5 standards

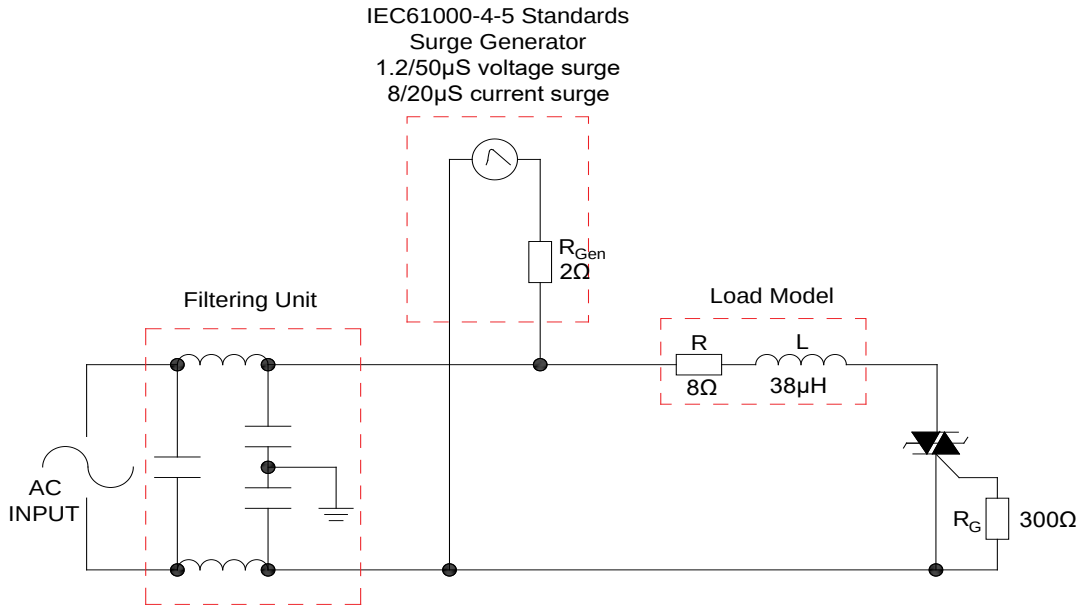

SOLDERING PARAMETERS

Reflow Condition		Pb-Free assembly (see figure at right)
Pre Heat	-Temperature Min ($T_{s(min)}$)	+150℃
	-Temperature Max($T_{s(max)}$)	+200℃
	-Time (Min to Max) (ts)	60-180 secs.
Average ramp up rate (Liquidus Temp (T_L)to peak)		3℃/sec. Max
$T_{s(max)}$ to T_L - Ramp-up Rate		3℃/sec. Max
Reflow	-Temperature(T_L)(Liquidus)	+217℃
	-Temperature(t_L)	60-150 secs.
Peak Temp (T_p)		+260(+0/-5)℃
Time within 5℃of actual Peak Temp (t_p)		20-40secs.
Ramp-down Rate		6℃/sec. Max
Time 25℃ to Peak Temp (T_P)		8 min. Max
Do not exceed		+260℃

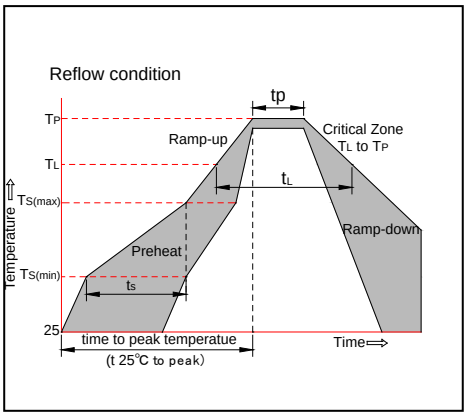

ORDERING INFORMATION

Order code	Voltage V_{DRM}/V_{RRM} (V)	IGT(mA)	Package	Base qty. (pcs)	Delivery mode
ACJT625-10K	1000	25	TO-252	80	Tube
ACJT625-10K-TR				2,500	Tape & Reel

Document Revision History

Date	Revision	Changes
Apr.14, 2023	A.1.0	Last updated
Oct.22, 2025	A.1.1	Revise PACKAGE MECHANICAL DATA

PACKAGE MECHANICAL DATA

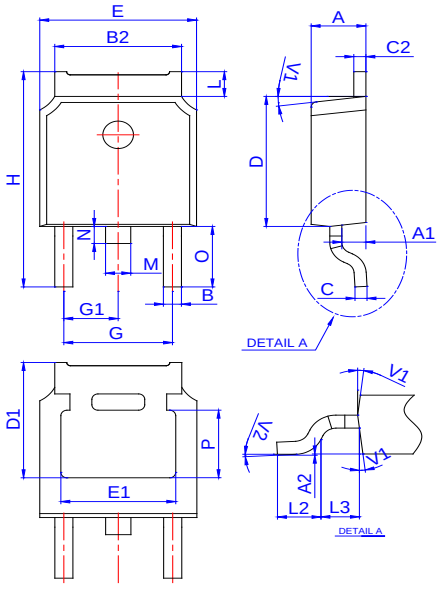

Ref.	Dimensions					
	Millimeters			Inches		
	Min.	Typ.	Max.	Min.	Typ.	Max.
A	2.10		2.50	0.083		0.098
A1	0.80		1.20	0.031		0.047
A2	0		0.15	0		0.006
B	0.66		0.86	0.026		0.034
B2	5.18		5.48	0.202		0.216
C	0.40		0.60	0.016		0.024
C2	0.44		0.58	0.017		0.023
D	5.90		6.30	0.232		0.248
D1	5.30REF			0.209REF		
E	6.40		6.80	0.252		0.268
E1	4.63			0.182		
G	4.47		4.67	0.176		0.184
G1	2.18		2.38	0.086		0.094
H	9.50		10.70	0.374		0.421
L	1.09		1.21	0.043		0.048
L2	1.35		1.65	0.053		0.065
L3	1.10		1.50	0.043		0.059
M	0.65		0.95	0.026		0.037
N	0.65		0.95	0.026		0.037
O	2.80		3.20	0.110		0.126
P	3.10		3.30	0.122		0.130
V1		7°			7°	
V2	0°		6°	0°		6°

FOOTPRINT-TO-252 (dimensions in mm)

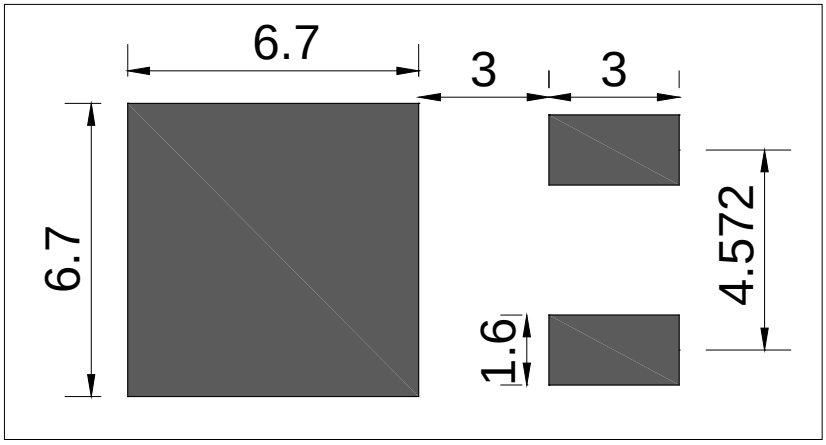

DELIVERY MODE

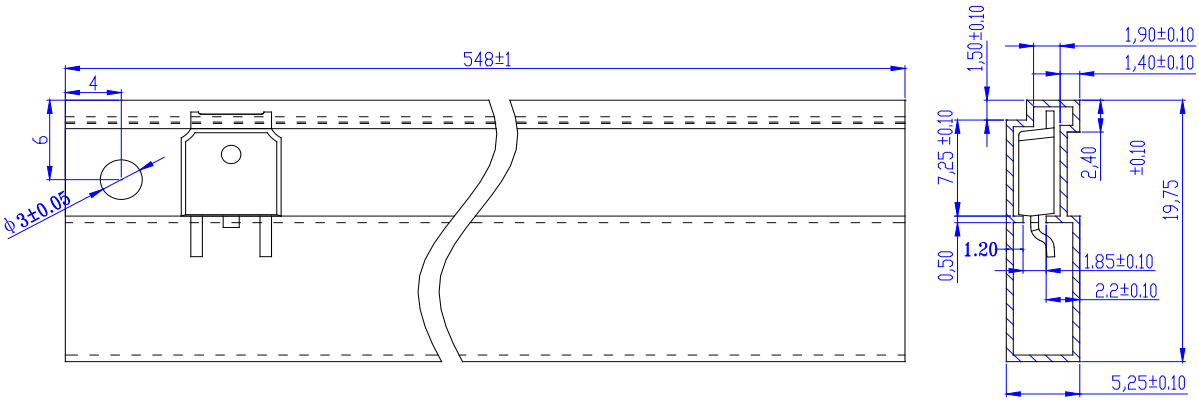

PACKAGE	OUTLINE	TUBE (PCS)	INNER BOX (PCS)	PER CARTON
TO-252	TUBE	80	4,000	20,000

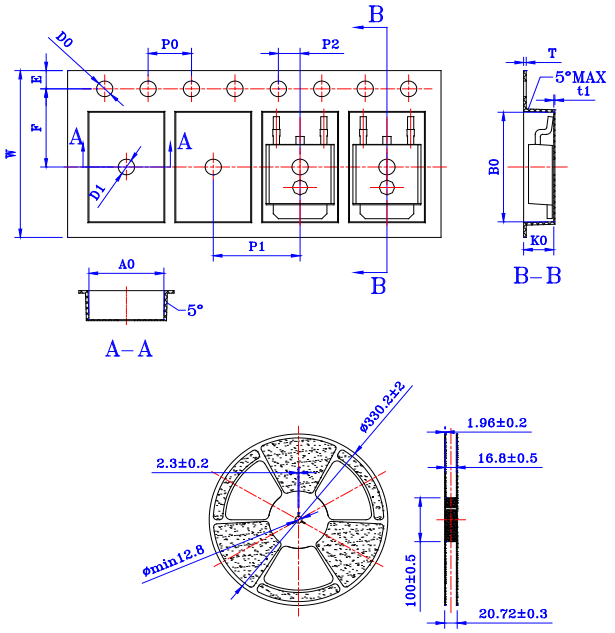

Ref.	Dimensions					
	Millimeters			Inches		
	Min.	Typ.	Max.	Min.	Typ.	Max.
W	15.90	16.00	16.10	0.626	0.630	0.634
E	1.65	1.75	1.85	0.065	0.069	0.073
F	7.40	7.50	7.60	0.291	0.295	0.299
D0	1.50	1.55	1.60	0.059	0.060	0.063
D1	1.50	–	–	0.059	–	–
P0	3.90	4.00	4.10	0.154	0.157	0.161
P1	7.90	8.00	8.10	0.311	0.315	0.319
P2	1.90	2.00	2.10	0.075	0.079	0.083
10P0	39.80	40.00	40.20	1.567	1.575	1.583
A0	6.80	6.90	7.00	0.267	0.272	0.276
B0	10.40	10.50	10.60	0.408	0.413	0.417
K0	2.60	2.70	2.80	0.102	0.106	0.110
T	0.25	0.30	0.35	0.010	0.012	0.014
t1	0.10	–	–	0.004	–	–

PACKAGE	OUTLINE	REEL (PCS)	PER CARTON (PCS)	TAPE & REEL
TO-252	TAPING	2,500	25,000	13 inch

Information furnished in this document is believed to be accurate and reliable. However, Jiangsu JieJie Microelectronics Co., Ltd. assumes no responsibility for the consequences of use without consideration for such information nor use beyond it. Information mentioned in this document is subject to change without notice, apart from that when an agreement is signed, Jiangsu JieJie complies with the agreement.
Products and information provided in this document have no infringement of patents. Jiangsu JieJie assumes no responsibility for any infringement of other rights of third parties which may result from the use of such products and information. This document supersedes and replaces all information previously supplied.
is a registered trademark of Jiangsu JieJie Microelectronics Co., Ltd.
Copyright © 2025 Jiangsu JieJie Microelectronics Co., Ltd. All rights reserved.