JST131 Series 1A TRIACs

Rev.11.0

DESCRIPTION:

With low holding and latching current, JST131 series triacs are especially recommended for use on middle and small resistance type power load. Package TO-92 is RoHS compliant. (2011/65/EU)

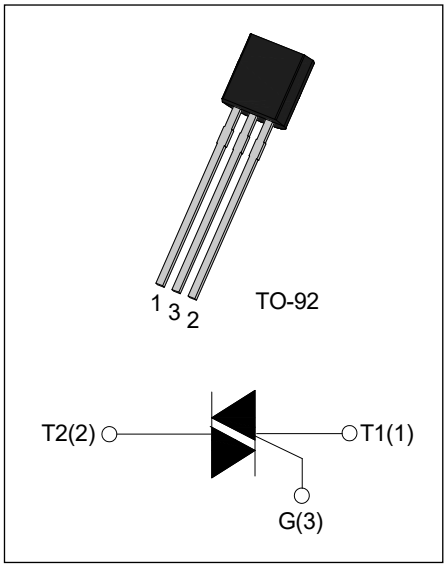

MAIN FEATURES

Symbol	Value	Unit
$I_{T(RMS)}$	1	A
I_{TSM}	16	A
V_{TM}	≤1.5	V

ABSOLUTE MAXIMUM RATINGS

Parameter		Symbol	Value	Unit
Storage junction temperature range		T_{stg}	-40 - 150	℃
Operating junction temperature range		T_j	-40 - 125	℃
Repetitive peak off-state voltage (T_j=25℃)		V_{DRM}	600/800	V
Repetitive peak reverse voltage (T_j=25℃)		V_{RRM}	600/800	V
RMS on-state current	TO-92 (T_C=50℃)	$I_{T(RMS)}$	1	A
Non repetitive surge peak on-state current (full cycle, F=50Hz)		I_{TSM}	16	A
I^2t value for fusing (tp=10ms)		I^2t	1.28	A^2s
Critical rate of rise of on-state current (I_G=2×I_{GT})		dI/dt	20	A/μs
Peak gate current		I_{GM}	2	A
Average gate power dissipation		$P_{G(AV)}$	0.5	W
Peak gate power		P_{GM}	5	W
Peak pulse voltage (Tj=25℃; non-repetitive,off-state;FIG.7)		V_{PP}	2.5	kV

ELECTRICAL CHARACTERISTICS (T_j=25℃ unless otherwise specified)

Symbol	Test Condition	Quadrant		Value			Unit
				T	D	E	
I_{GT}	V_D=12V R_L=33Ω	Ⅰ-Ⅱ-Ⅲ	MAX	5	5	10	mA
		Ⅳ		5	10	25	
V_{GT}		ALL	MAX	1.3			V
V_{GD}	V_D=V_{DRM} T_j=125℃ R_L=3.3KΩ	ALL	MIN	0.2			V
I_L	I_G=1.2I_{GT}	Ⅰ-Ⅲ-Ⅳ	MAX	5	5	15	mA
		Ⅱ		10	20	30	
I_H	I_T=200mA		MAX	5	7	15	mA
dV/dt	V_D=2/3V_{DRM} Gate Open T_j=125℃		MIN	15	20	50	V/μs
(dV/dt)c	(dI/dt)c=0.44A/ms, T_j=110℃		MIN	-	1	-	V/μs

STATIC CHARACTERISTICS

Symbol	Parameter		Value(MAX)	Unit
V_{TM}	I_{TM}=1.4A tp=380μs	T_j=25℃	1.5	V
V_{TO}	Threshold voltage	T_j=125℃	0.95	V
Rd	Dynamic resistance	T_j=125℃	256	mΩ
I_{DRM}	V_D=V_{DRM} V_R=V_{RRM}	T_j=25℃	5	μA
I_{RRM}		T_j=125℃	500	μA

THERMAL RESISTANCES

Symbol	Parameter		Value	Unit
$R_{th(j-c)}$	junction to case(AC)	TO-92	60	℃/W

ORDERING INFORMATION

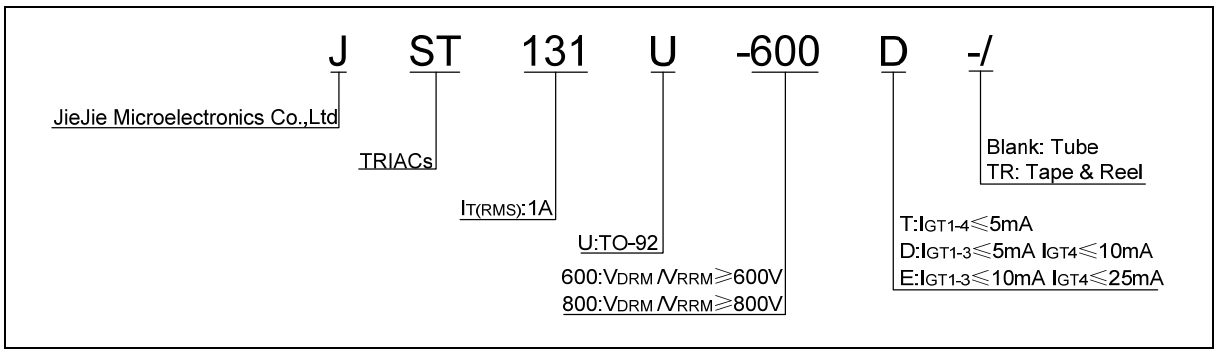

MARKING

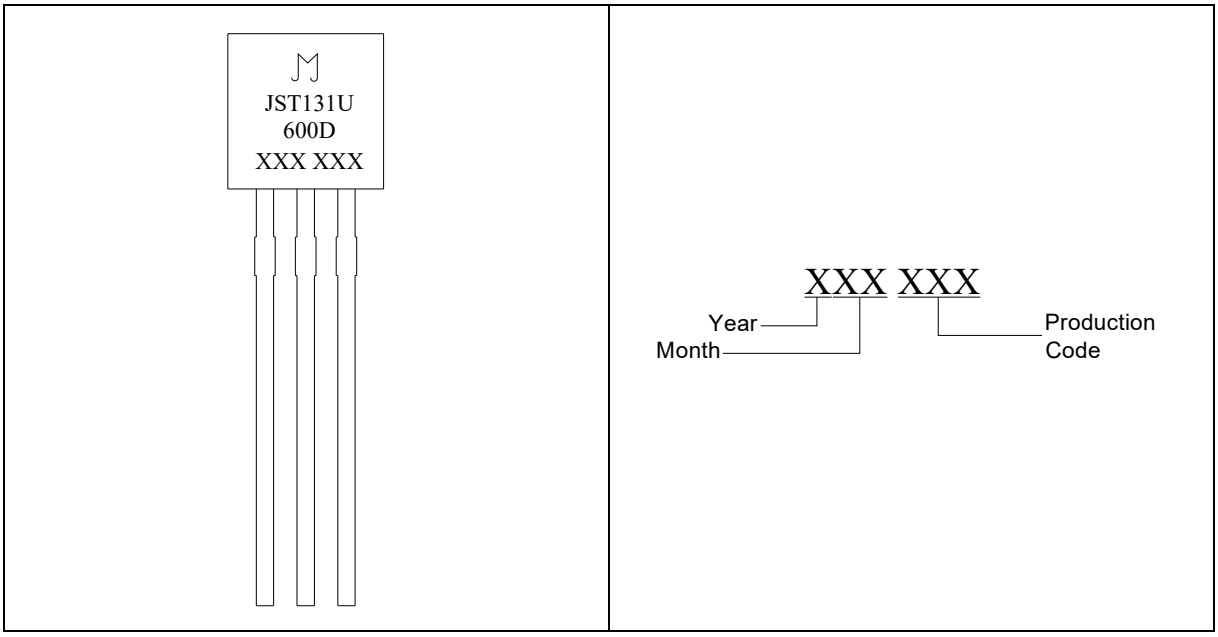

FIG.1: Maximum power dissipation versus RMS on-state current

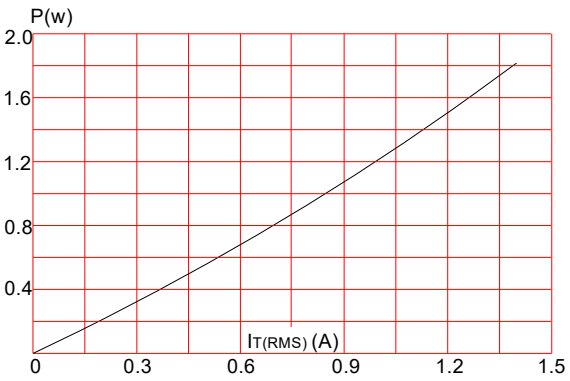

FIG.2: RMS on-state current versus case temperature

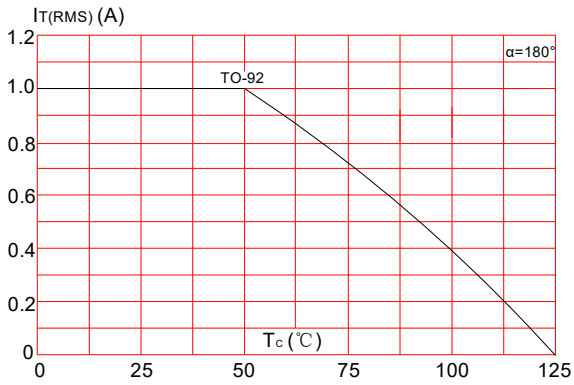

FIG.3: Surge peak on-state current versus number of cycles

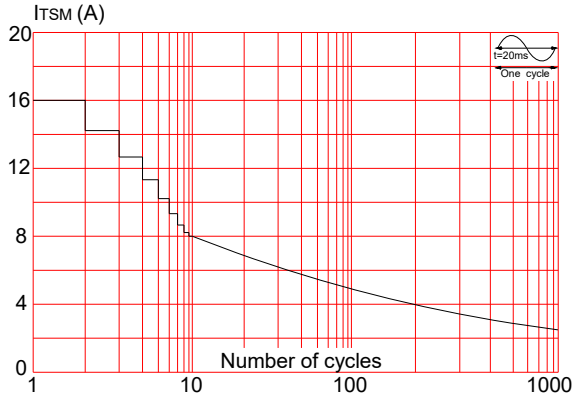

FIG.4: On-state characteristics (maximum values)

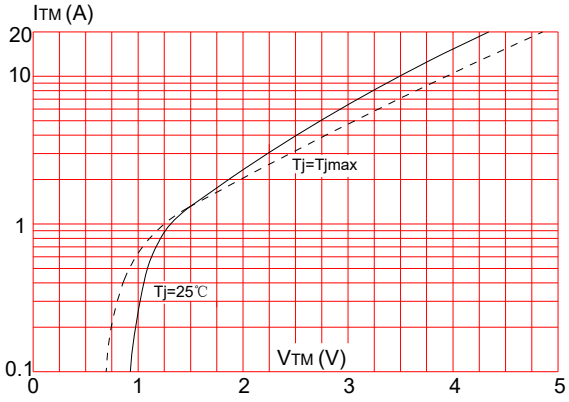

FIG.5: Non-repetitive surge peak on-state current for a sinusoidal pulse with width tp<20ms and corresponding value of I²t (dI/dt < 20A/μs)

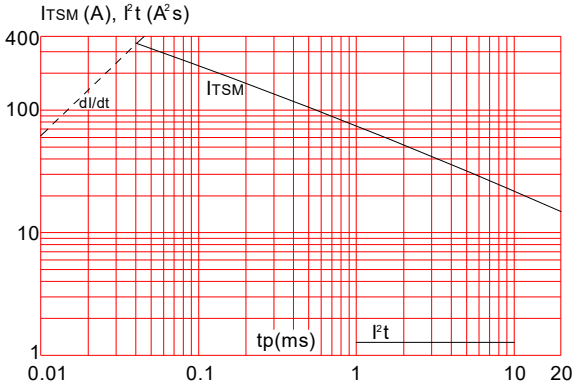

FIG.6: Relative variations of gate trigger current, holding current and latching current versus junction temperature

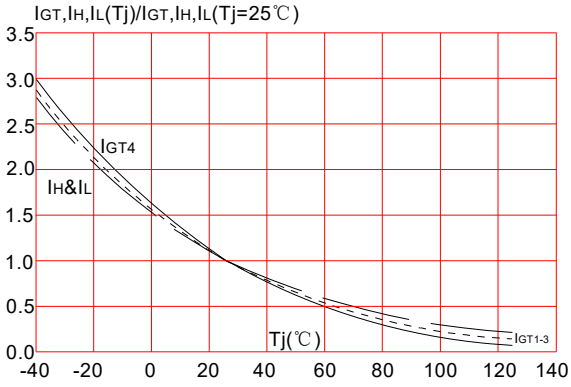

FIG.7：Test circuit for inductive and resistive loads to IEC-61000-4-5 standards.

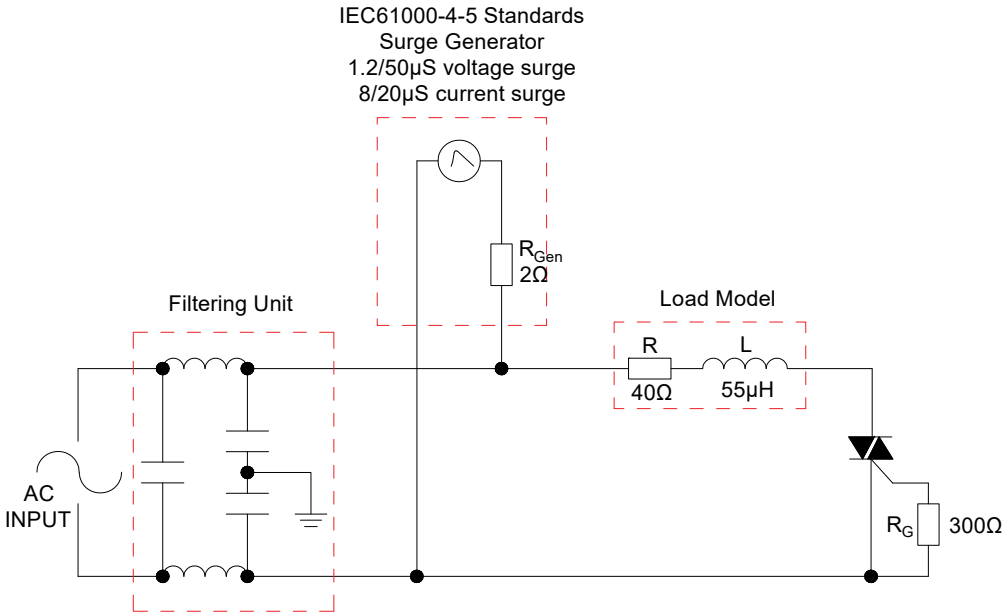

ORDERING INFORMATION

Order code	Voltage V_{DRM}/V_{RRM} (V)	IGT(mA)		Package	Base qty. (pcs)	Delivery mode
		Ⅰ-Ⅱ-Ⅲ	Ⅳ			
JST131U-600/800T	600/800	5	5	TO-92	1,000 2,000	Bulk Pack Reel
JST131U-600/800D		5	10			
JST131U-600/800E		10	25			

Document Revision History

Date	Revision	Changes
Feb.1, 2020	9	Last update
Sep 8, 2021	10	Add V_{PP} Value
Jan 10, 2022	11	Renew Vto & Rd value

PACKAGE MECHANICAL DATA

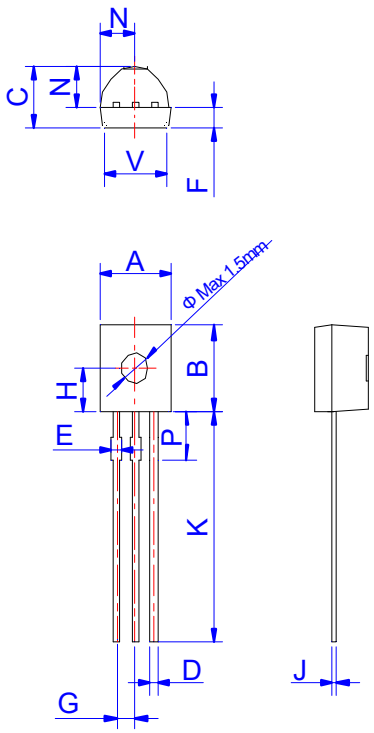

Ref.	Dimensions					
	Millimeters			Inches		
	Min.	Typ.	Max.	Min.	Typ.	Max.
A	4.45		5.20	0.175		0.205
B	4.32		5.33	0.170		0.210
C	3.18		4.19	0.125		0.165
D	0.407		0.533	0.016		0.021
E	0.50		0.70	0.020		0.028
F	1.10		1.30			0.051
G	1.10		1.40	0.043		0.055
H	2.20		2.40	0.087		0.094
J	0.36		0.50	0.014		0.020
K	12.70		15.0	0.500		0.591
N	2.04		2.66	0.080		0.105
P	1.80		2.30	0.071		0.091
V	4.10		4.50	0.161		0.177

DELIVERY MODE

PACKAGE	OUTLINE	BAG (PCS)	INNER BOX (PCS)	CARTON BOX (PCS)
TO-92	Bulk Pack	1,000	10,000	50,000

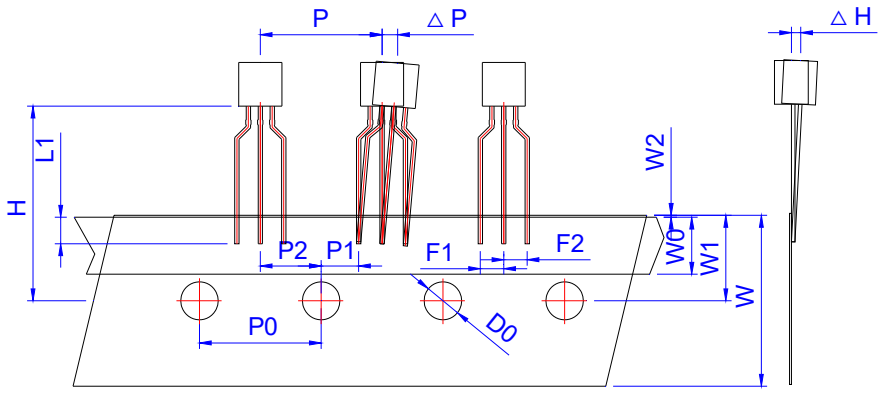

Ref.	Dimensions					
	Millimeters			Inches		
	Min.	Typ.	Max.	Min.	Typ.	Max.
P	12.40	12.70	13.00	0.488	0.500	0.512
P0	12.40	12.70	13.00	0.488	0.500	0.512
P1	3.55	3.85	4.15	0.140	0.152	0.163
P2	6.05	6.35	6.65	0.238	0.250	0.262
△P	-1.0	0	1.0	-0.039	0	0.039
F1、F2	2.20	2.50	2.80	0.087	0.098	0.110
F1-F2	-0.3	0	0.3	-0.012	0	0.012
W	17.50	18.00	19.00	0.689	0.709	0.748
W0	5.50	6.00	6.50	0.217	0.236	0.256
W1	8.50	9.00	9.50	0.335	0.354	0.374
W2			1.0			0.039
D0	3.80	4.0	4.20	0.150	0.157	0.165
△H	-1.0	0	1.0	-0.039	0	0.039
L1	2.5			0.098		
H	18.0	19.0	20.0	0.709	0.748	0.787

PACKAGE	OUTLINE	REEL (PCS)	INNER BOX (PCS)	CARTON BOX (PCS)
TO-92	Tape & Reel	/	2,000	20,000

Information furnished in this document is believed to be accurate and reliable. However, Jiangsu JieJie Microelectronics Co.,Ltd assumes no responsibility for the consequences of use without consideration for such information nor use beyond it. Information mentioned in this document is subject to change without notice, apart from that when an agreement is signed, Jiangsu JieJie complies with the agreement. Products and information provided in this document have no infringement of patents. Jiangsu JieJie assumes no responsibility for any infringement of other rights of third parties which may result from the use of such products and information. This document supersedes and replaces all information previously supplied.

is a registered trademark of Jiangsu JieJie Microelectronics Co.,Ltd.

Copyright ©2022 Jiangsu JieJie Microelectronics Co.,Ltd. Printed All rights reserved.