JMD75TD20D1H

Three Phase Rectifier Bridge Module

Features

- Low forward voltage and leakage current
- Low inductance package
- High surge current capability

Product Summary

Parameter	Value	Unit
V_{RRM}	2000	V
I_D(@ T_C = 100℃)	75	A
I_{FSM}(@ t_P = 10ms)	750	A
V_{FM}(Max)	1.40	V

Applications

- Field supply for DC motors
- Line rectifiers for transistorized AC motor controllers
- Non-controllable rectifiers for AC/DC converter

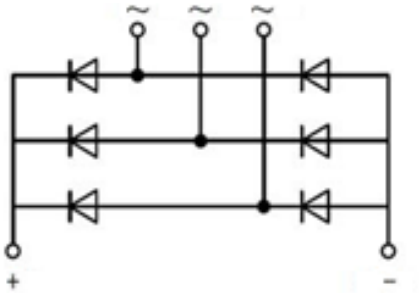

Absolute Maximum Ratings (@ T_C = 25°C unless otherwise specified)

Parameter	Conditions	Symbol	Values	Unit
Repetitive peak reverse voltage	T_{vj} = 25°C	V_{RRM}	2000	V
Non-repetitive peak reverse voltage	T_{vj} = 25°C	V_{RSM}	2100	V
Average forward current	T_C = 100°C	I_D	75	A
Forward surge current	1/2 cycle, Sine wave, 50Hz T_{vj} = 25℃	I_{FSM}	750	A
I^2t value for fusing		I^2t	2800	A^2s
RMS isolation voltage	A.C 50Hz(1s/1min)	V_{ISO}	3600/3000	V
Junction temperature range		T_{vj}	-40 ~ +150	℃
Storage temperature range		T_{stg}	-40 ~ +125	℃

Jiangsu JieJie Microelectronics Co., Ltd.
All product information is copyrighted and subject to legal disclaimers

Electrical Characteristics (@ T_C = 25°C unless otherwise specified)

Parameter	Conditions	Symbol	Values			Unit
			Min.	Typ.	Max.	
Peak forward voltage	I_F=75A, t_P=380μs	V_{FM}		1.20	1.40	V
Reverse leakage current	V_R = V_{RRM}, T_{vj} = 25℃	I_{RRM}			0.3	mA
	V_R = V_{RRM}, T_{vj} = 150℃				5	mA
Threshold voltage	T_{vj} = 150℃, for power loss calculation only	V_{TO}			0.90	V
Dynamic resistance		r_T			4.2	mΩ

Thermal Characteristics (@ T_C = 25°C unless otherwise specified)

Parameter	Conditions	Symbol	Values			Unit
			Min.	Typ.	Max.	
Thermal resistance, junction to case	per diode	$R_{th(j-c)}$			1.2	K/W
Thermal resistance, case to heatsink	per module	$R_{th(c-s)}$			0.07	K/W
Mounting torque	Module and heatsink fixed torque M5	M	4.25		5.75	N·m
	Electrode to terminal screw M5	M	4.25		5.75	N·m

Ordering Information

Device	Marking	Package	Weight	Inner Box	Per Carton
JMD75TD20D1H	JMD75TD20D1H	D1H	128g/PCS	5PCS	45PCS

Jiangsu JieJie Microelectronics Co., Ltd.
All product information is copyrighted and subject to legal disclaimers

Typical Electrical & Thermal Characteristics

FIG.1: Forward characteristics(per diode)

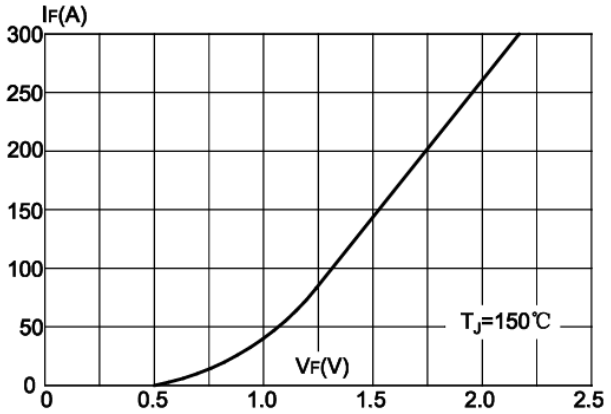

FIG.2: Peak on-state surge current

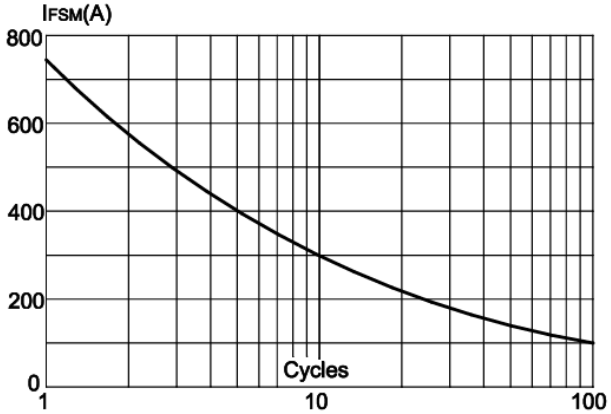

FIG.3: Forward current vs. case temperature

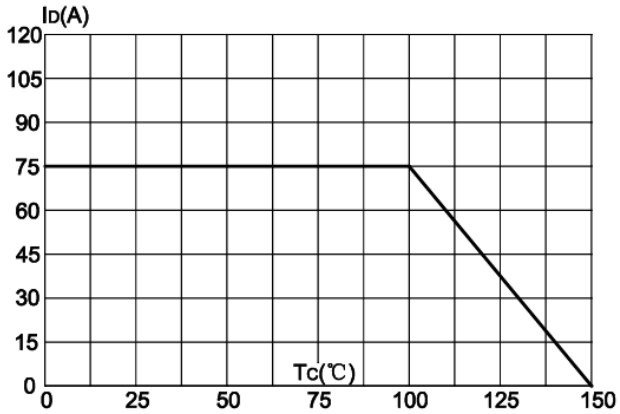

FIG.4: Maximum transient thermal impedance Junction-to-case(per diode)

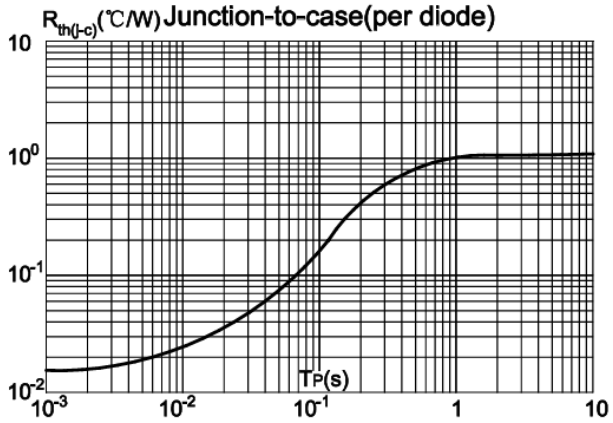

Circuit Diagram

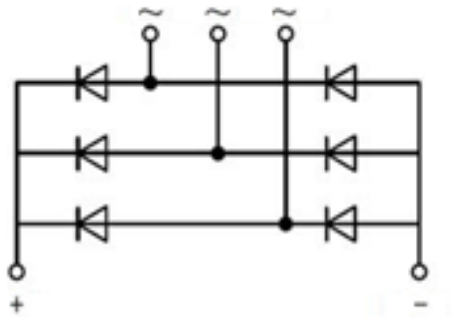

Jiangsu JieJie Microelectronics Co., Ltd.
All product information is copyrighted and subject to legal disclaimers

Package Outlines (mm)

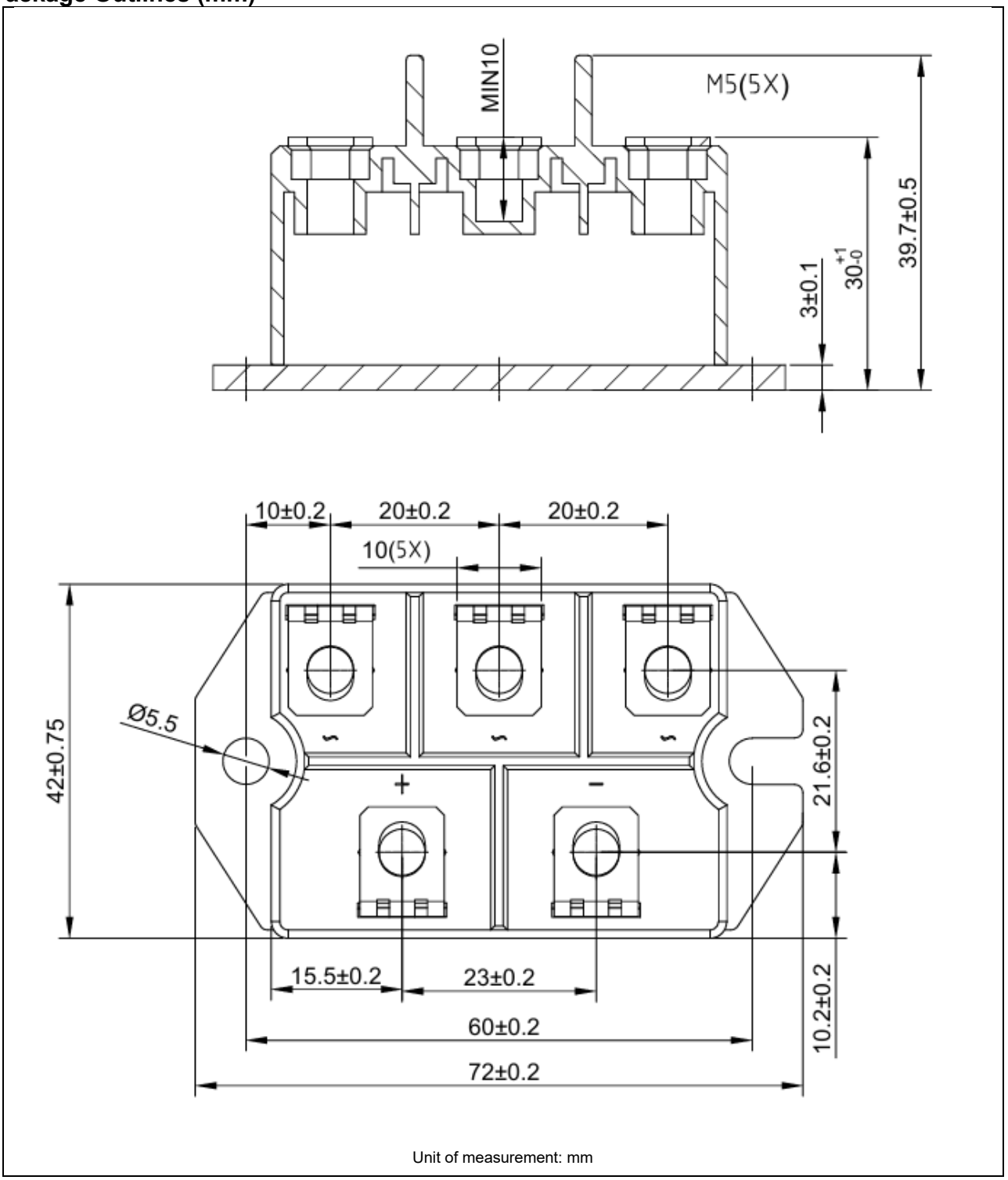

All product information is copyrighted and subject to legal disclaimers

Information furnished in this document is believed to be accurate and reliable. However, Jiangsu JieJie Semiconductor Co., Ltd assumes no responsibility for the consequences of use without consideration for such information nor use beyond it. This information in this document is subject to change without prior notice. Notwithstanding this, Jiangsu JieJie will fully comply with the terms outlined in a signed agreement. Products and information provided in this document have no infringement of patents. Jiangsu JieJie assumes no responsibility for any infringement of other rights of third parties which may result from the use of such products and information. This document is the initial release, dated 20 July 2026. This document supersedes and replaces all information previously supplied.

is registered trademark of Jiangsu JieJie Semiconductor Co., Lt ©2026 Jiangsu JieJie Semiconductor Co., Ltd. All rights reserved.