JMT100DS18L1C

Multifunctional integration Modules

Features

- Three phase bridge and a thyristor
- Low forward voltage
- High wave surging capability

Product Summary

Parameter	Value	Unit
V_{RRM}	1800	V
I_D	100	A
I_{FSM}(@ t_P = 10ms)	1200	A
V_F(Max)	1.40	V

Applications

- Inverter for AC or DC motor control
- Current stabilized power supply
- Switching power supply

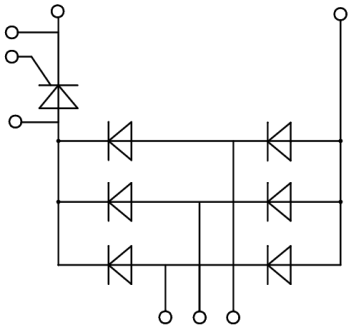

Thyristor Absolute Maximum Ratings (@ T_C = 25°C unless otherwise specified)

Parameter	Conditions	Symbol	Values	Unit
Repetitive peak reverse voltage		V_{DRM} /$_{RRM}$	1800	V
Non-repetitive peak reverse voltage	Tvj = 25°C	V_{DSM} /$_{RSM}$	1900	V
Bridge output current	T_C = 85°C	$I_{D(AV)}$	100	A
Repetitive peak forward current	t_P = 10 ms, Tvj = 25°C	I_{TSM}	1200	A
I2t value for fusing	t_P = 10 ms, Tvj = 25°C	I^2t	7200	A2s
Critical rate of rise of on-state current		di/dt	150	A/μs
Critical rate of rise of voltage	V_D=2/3V_{DRM} T_J=125℃ Gate Open	dv/dt	1000	V/μs

Jiangsu JieJie Microelectronics Co., Ltd.
All product information are copyrighted and subject to legal disclaimers

Thyristor Rectifier Electrical Characteristics (@ T_C = 25°C unless otherwise specified)

Parameter	Conditions	Symbol	Values			Unit
			Min.	Typ.	Max.	
Forward voltage	I_T=100A	V_{TM}		1.10	1.30	V
Repetitive peak off-state current	$V_D = V_{DRM}$, T_{vj} = 25℃	I_{DRM}			0.1	mA
	$V_D = V_{DRM}$, T_{vj} = 125℃				20	mA
Reverse leakage current	$V_R = V_{RRM}$, T_{vj} = 25℃	I_{RRM}			0.1	mA
	$V_R = V_{RRM}$, T_{vj} = 125℃				20	mA
Threshold voltage	For power loss calculation only T_{vj} = 125℃,	V_{TO}			0.85	V
Dynamic resistance	T_{vj} = 125℃,	r_T			2.5	mΩ
Triggering gate voltage	V_D=12V, R_L=30Ω	V_{GT}			1.8	V
Triggering gate current	V_D=12V, R_L=30Ω	I_{GT}	20		120	mA
Holding current	I_T=1A	I_H			250	mA
Latching current	I_G=1.2 IGT	I_L			300	mA
Non triggering gate voltage	$V_D=V_{DRM}$, T_{vj}=125℃	V_{GD}	0.25			V
Thermal resistance, junction to case	per diode	R_{thJC}			0.26	K/W
Temperature under operating conditions		T_{VjOP}	-40		125	℃

Diode Absolute Maximum Ratings (@ T_C = 25°C unless otherwise specified)

Parameter	Conditions	Symbol	Values	Unit
Repetitive peak reverse voltage		V_{RRM}	1600	V
Non-repetitive peak reverse voltage		V_{RSM}	1700	V
Output current	T_C = 100℃	I_D	100	A
Forward surge current	1/2 cycle, Sine wave, 50Hz T_{vj} = 25℃	I_{FSM}	1200	A
I^2t value for fusing		I^2t	7200	A^2s
Temperature under operating conditions		T_{VjOP}	-40 ~ +150	℃

Jiangsu JieJie Microelectronics Co., Ltd.
All product information are copyrighted and subject to legal disclaimers

Electrical Characteristics (@ T_C = 25°C unless otherwise specified)

Parameter	Conditions	Symbol	Values			Unit
			Min.	Typ.	Max.	
Forward voltage	I_D = 100A, Tvj = 25℃	V_F		1.20	1.40	V
Reverse leakage current	V_R = V_{RRM}, Tvj = 25℃	I_{RRM}			0.1	mA
	V_R = V_{RRM}, Tvj = 150℃				20	mA
Thermal resistance, junction to case	per diode	R_{thJC}			0.18	K/W

Module Characteristics (@ T_C = 25°C unless otherwise specified)

Parameter	Conditions	Symbol	Values			Unit
			Min.	Typ.	Max.	
RMS isolation voltage	A.C 50Hz, 1min	V_{ISO}	3000			V
Thermal resistance, case to heatsink	per module	R_{thCS}			0.10	K/W
Maximum Junction Temperature	Thyristor	$T_{vj\ max}$			125	℃
	Diode				150	℃
Storage temperature range		T_{stg}	-40		125	℃
Mounting torque	To terminals(M5)	Mt	2.55		3.45	N·m
	To heatsinks(M5)	Ms	2.55		3.45	N·m

Ordering Information

Device	Marking	Package	Weight	Inner Box	Per Carton
JMT100DS18L1C	JMT100DS18L1C	L1	210g/PCS	12 PCS	60 PCS

Jiangsu JieJie Microelectronics Co., Ltd.
All product information are copyrighted and subject to legal disclaimers

Typical Electrical & Thermal Characteristics

FIG.1: Power dissipation vs. on-state current (per thyristor)

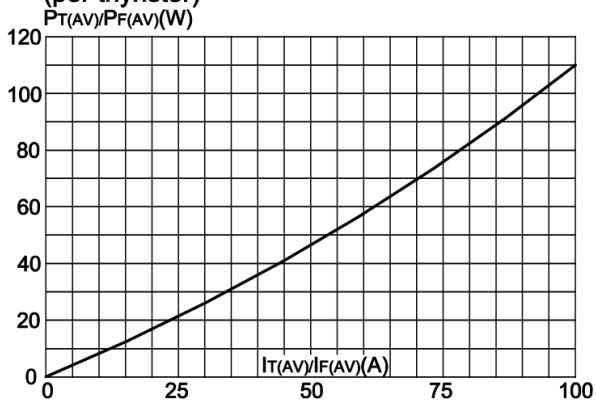

FIG.2: Maximum transient thermal impedance junction to case(per thyristor)

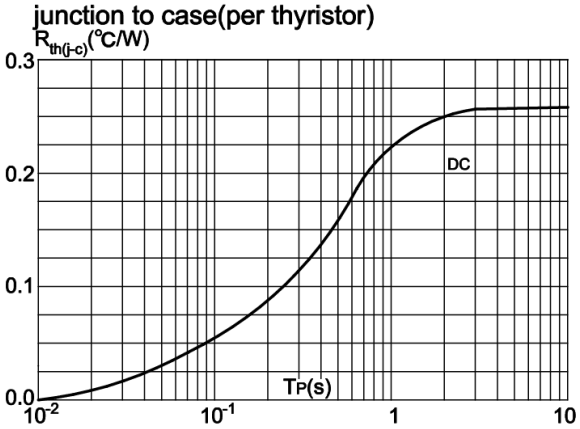

FIG.3: Forward characteristics (per thyristor)

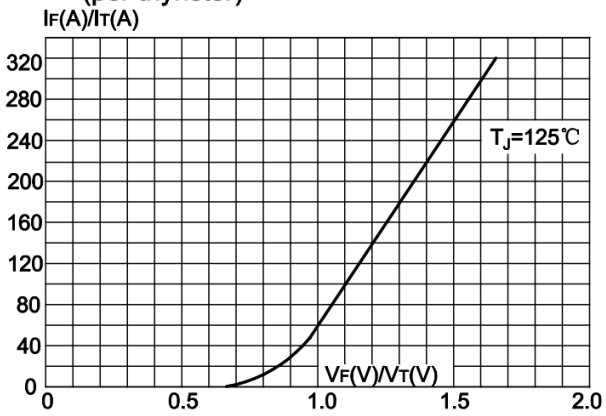

FIG.4: Relative variations of gate trigger current, holding current and latching current versus junction temperature

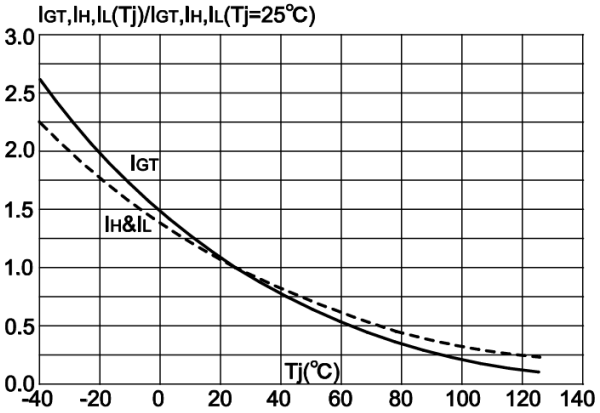

FIG.5 Gate trigger characteristics

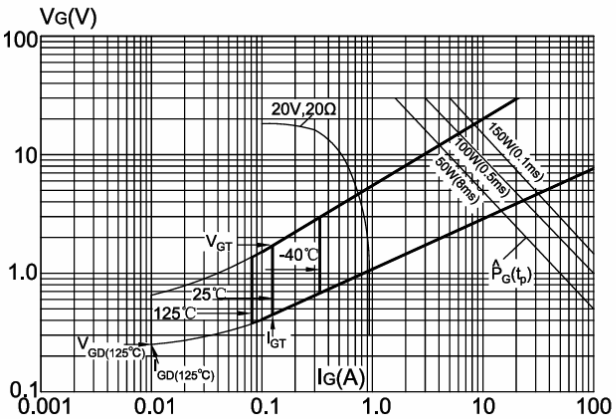

FIG.6: Forward current vs. case temperature (per thyristor)

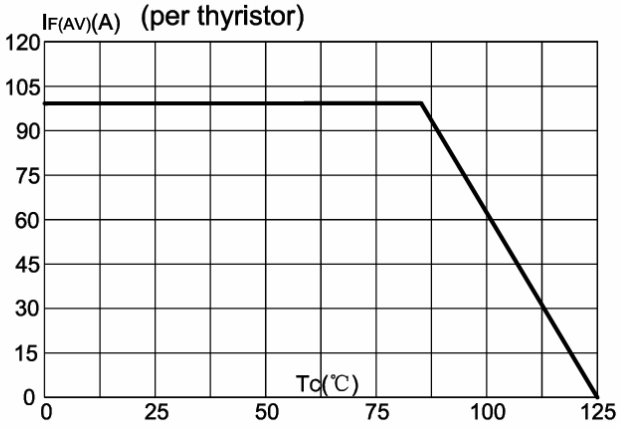

Jiangsu JieJie Microelectronics Co., Ltd.
All product information are copyrighted and subject to legal disclaimers

FIG.7: Forward characteristics(per diode)

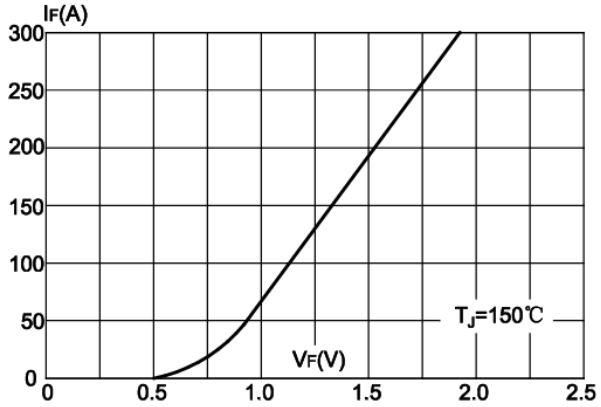

FIG.8: Peak on-state surge current (per diode or thyristor)

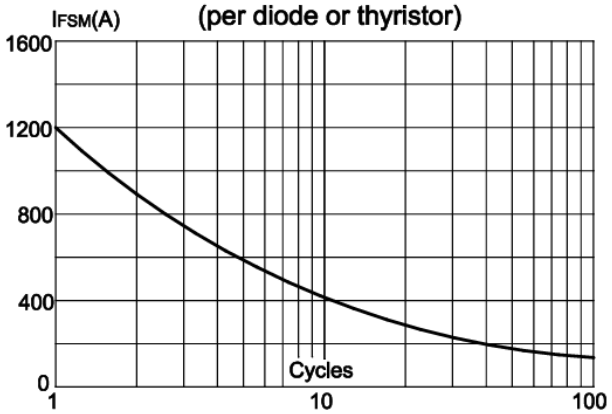

FIG.9: Forward current vs. case temperature (per diode)

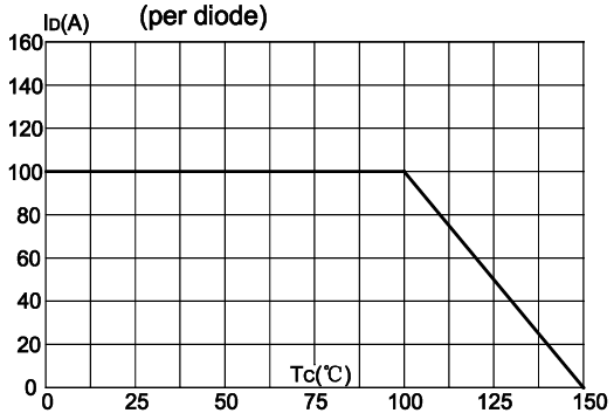

FIG.10: Maximum transient thermal impedance Junction-to-case(per diode)

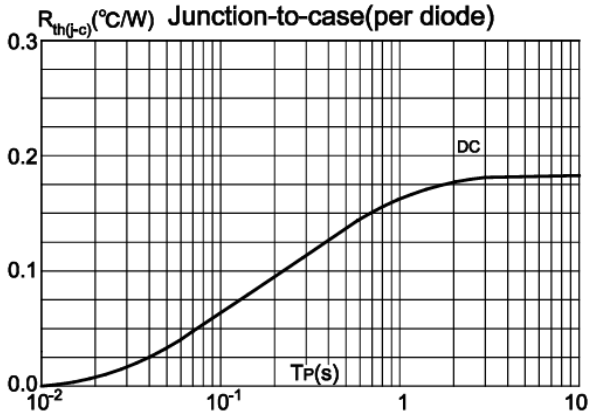

All product information are copyrighted and subject to legal disclaimers

Circuit Diagram

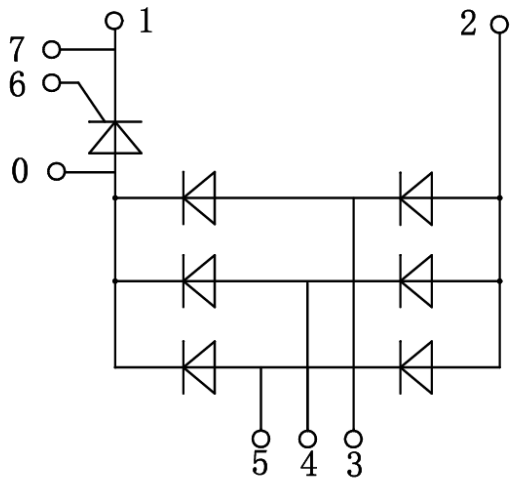

Package Outlines (mm)

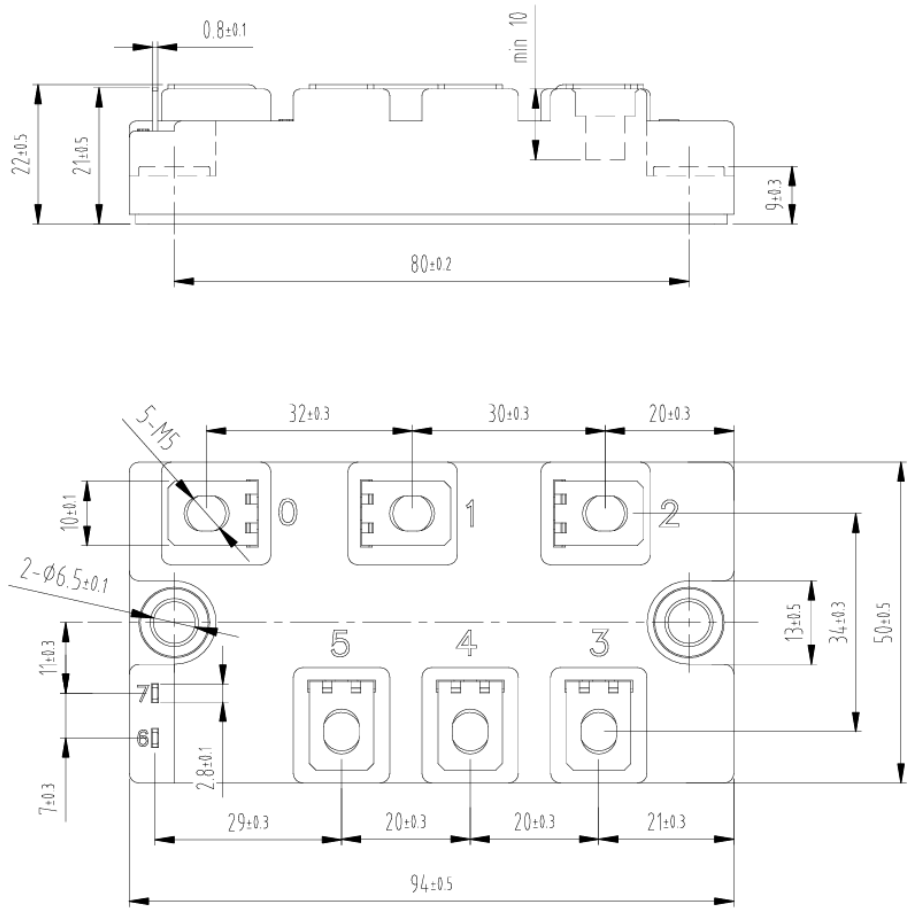

Unit of measurement: mm

All product information are copyrighted and subject to legal disclaimers

Information furnished in this document is believed to be accurate and reliable. However, Jiangsu JieJie Semiconductor Co., Ltd assumes no responsibility for the consequences of use without consideration for such information nor use beyond it. This information in this document is subject to change without prior notice. Notwithstanding this, Jiangsu JieJie will fully comply with the terms outlined in a signed agreement. Products and information provided in this document have no infringement of patents. Jiangsu JieJie assumes no responsibility for any infringement of other rights of third parties which may result from the use of such products and information. This document is the initial release, dated 3 September 2026 This document supersedes and replaces all information previously supplied.

JMT is registered trademark of Jiangsu JieJie Semiconductor Co., Lt ©2026 Jiangsu JieJie Semiconductor Co., Ltd. All rights reserved.